Operating instructions

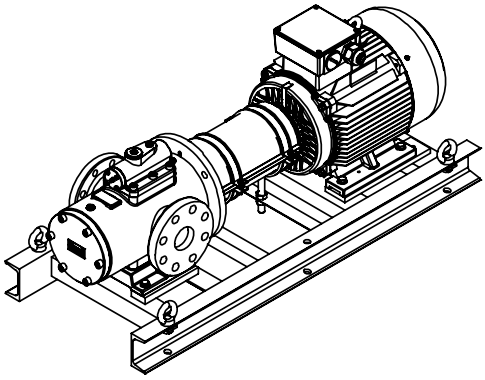

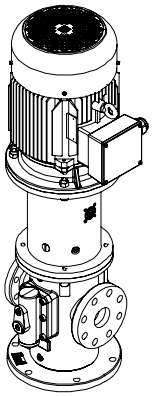

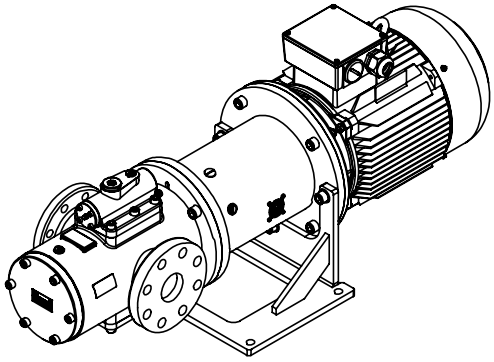

KRAL screw pumps.

Series C / Type CGF/CGH/CGV/CLE

Mechanical seal/Radial shaft seal

OIC 18en-GB
Edition 2026-10
Original instructions

www.kral.at

1 About this document ... 4
1.1 General information ... 4
1.2 Associated documents ... 4
1.3 Target groups ... 4
1.4 Symbols ... 4
1.4.1 Danger levels ... 4
1.4.2 Danger signs ... 5
1.4.3 Symbols in this document ... 5

2 Safety ... 5
2.1 Proper use ... 5
2.2 Foreseeable misuse ... 5
2.3 Obligations of the operator-owner ... 6
2.4 Safety instructions ... 6
2.4.1 Fundamental safety instructions ... 6

3 Identification ... 6
3.1 Type code ... 6
3.2 Rating plate ... 8

4 Technical data ... 8
4.1 Operating limits ... 8
4.2 Required NPSH values ... 9
4.3 Sound pressure level ... 9
4.4 Weights ... 9

5 Function description ... 9
5.1 Cartridge pump structure ... 9
5.2 Pump unit structure ... 11
5.3 Functional principle ... 11
5.4 Housing variants ... 12
5.5 Shaft seal ... 12
5.5.1 Seal variants inner bearing ... 12
5.5.2 Seal variants outer bearing ... 13
5.5.3 Mechanical seal cartridge ... 13
5.6 Overflow valve (optional) ... 13
5.7 Heating system (optional) ... 14

6 Transportation, storage ... 14
6.1 Dangers during transportation ... 14
6.2 Dangers during storage ... 14
6.3 Unpacking and checking the state of delivery ... 14
6.4 Transporting the pump/pump unit ... 14
6.5 Storing the pump ... 15

7 Preservation ... 16
7.1 Preservation table ... 16
7.2 Preserving the inner surfaces ... 16
7.3 Preserving the outer surfaces ... 16
7.4 Removing the preservation ... 17

8 Installation, removal ... 17
8.1 Dangers during installation ... 17
8.2 Dangers during removing ... 17
8.3 Installing the pump ... 18
8.4 Removing the pump ... 19

9 Connection ... 20
9.1 Dangers during connection work ... 20
9.2 Connecting the pump to the pipe system ... 20
9.3 Insulating the pump ... 21
9.4 Assembling the pump and motor ... 21
9.5 Connecting the pump unit to the power supply ... 22

10 Operation ... 22
10.1 Dangers during operation ... 22
10.2 Commissioning ... 22
10.2.1 Cleaning the pipe system ... 22
10.2.2 Filling and venting the pump ... 23
10.2.3 Checking the direction of rotation ... 25
10.2.4 Commissioning the pump ... 26
10.3 During operation ... 27
10.3.1 Checking the operating pressure ... 27
10.3.2 Monitoring the filter and/or strainer ... 27
10.3.3 Set overflow valve (optional) and test function ... 28
10.3.4 Switching off the pump unit ... 28
10.4 Decommissioning ... 28
10.4.1 Decommissioning the pump ... 28
10.5 Recommissioning ... 29
10.5.1 Recommissioning the pump ... 29

11 Maintenance ... 29
11.1 Dangers during maintenance ... 29
11.2 Required maintenance ... 30
11.3 Ball bearing (inner bearing) ... 30
11.4 Ball bearing (outer bearing) ... 30
11.5 Maintaining the pump ... 30
11.6 Cleaning the leakage vent hole ... 30

12 Servicing ... 31
12.1 Instruction videos ... 31
12.2 Dangers during servicing ... 31
12.3 Wear ... 31
12.3.1 Signs of wear ... 31
12.3.2 Shaft seal ... 31
12.4 Replacing the coupling ... 32
12.4.1 Removing the coupling ... 32
12.4.2 Installing the coupling ... 33
12.5 Replacing the mechanical seal cartridge ... 34
12.6 Replacing the mechanical seal (inner bearing) ... 34
12.6.1 Removing the mechanical seal ... 34
12.6.2 Installing the mechanical seal ... 35
12.7 Replacing the radial shaft seal (inner bearing) ... 37
12.7.1 Removing the radial shaft seal ... 37
12.7.2 Installing the radial shaft seal ... 38
12.8 Replacing the ball bearing and screw set (inner bearing) ... 39
12.8.1 Removing the ball bearing and screw set ... 39
12.8.2 Installing the ball bearing and screw set ... 40
12.9 Replacing the mechanical seal and ball bearing (outer bearing) ... 42
12.9.1 Removing the mechanical seal and ball bearing ... 42
12.9.2 Installing the mechanical seal and ball bearing ... 44
12.10 Replacing the screw set (outer bearing) ... 45
12.10.1 Removing the screw set ... 45
12.10.2 Installing the screw set ... 46
12.11 Replacing the cartridge pump ... 48
12.11.1 Removing the cartridge pump ... 48

12.11.2 Installing the cartridge pump 49

13 Disposal 50

13.1 Dismantling and disposing of the pump 50

14 Troubleshooting 50

14.1 Possible faults 50

14.2 Troubleshooting 51

15 Accessories 53

15.1 Heating 53

15.1.1 Possible types of heating 53

15.1.2 Fluid heating system 53

15.2 Overflow valve 55

15.2.1 Adjusting the overflow valve 56

15.2.2 Test the overflow valve 57

16 Spare parts 58

16.1 Overview of CLE 15 – 660, CLE 880 (inner bearing) . 58

16.2 Overview of CLE 851, CLE 951 – 3550 (inner bearing) 59

16.3 Overview of CLE 32 – 42, 55 – 660, CLE 880 (outer bearing) 60

16.4 Overview of CLE 851, CLE 951 – 3550 (outer bearing) 61

16.5 Overview of outer housing GJS CGF/CGH/CGV 62

16.6 Overview of outer housing steel CGF/CGH/CGV 62

16.7 Overview of accessories CGF/CGH/CGV 63

16.8 Tool sets 63

16.8.1 Mechanical seal tool set K 63

16.8.2 Radial shaft seal tool set K 64

17 Appendix 64

17.1 Tightening torques for screws with metric screw threads with and without wedge lock washers 64

17.2 Tightening torques for screw plugs with thread measured in inches and elastomer seal 65

17.3 Contents of the Declaration of Conformity 65

1 About this document

1.1 General information

These instructions form part of the product and must be kept for future reference. Furthermore please observe the associated documents.

1.2 Associated documents

- ☐ **Up to 19/01/2027:** Declaration of conformity according to Machinery Directive 2006/42/EC
- ☐ **From 20/01/2027:** Declaration of conformity according to Machinery Regulation (EU) 2023/1230
- ☐ Manufacturer's declaration according to EU Directive 2014/68/EU
- ☐ Data sheet of the pump
- ☐ Technical documentation of the supplied components

Additional documents for ATEX version

- ☐ Declaration of conformity according to EU Directive 2014/34/EU
- ☐ ATEX supplementary instructions for usage in potentially explosive areas

1.3 Target groups

The instructions are intended for the following persons:

- ☐ Persons who work with the product
- ☐ Operator-owners who are responsible for the use of the product

Persons who work with the product must be qualified. The qualification ensures that possible dangers and material damage that are connected to the activity are detected and avoided. These persons are qualified personnel who carry out the work properly due to their training, knowledge and experience and on the basis of the relevant provisions.

Information on the required qualification of the personnel is provided separately at the beginning of the individual chapters in these instructions. The following table provides an overview.

Target group	Activity	Qualification
Transport personnel	Transporting, unloading, setting up	Qualified personnel for transport, mobile crane operators, crane operators, forklift operators
Fitter	Mounting, connection	Qualified personnel for mounting
Electrician	Electrical connection	Qualified personnel for electric installation
Trained personnel	Delegated task	Personnel trained by the operator-owner who know the task delegated to them and the possible dangers arising through improper behaviour.

Tab. 1: Target groups

1.4 Symbols

1.4.1 Danger levels

	Signal word	Danger level	Consequences of non-observance
	DANGER	Immediate threat of danger	Serious personal injury, death
	WARNING	Possible threat of danger	Serious personal injury, invalidity
	CAUTION	Potentially dangerous situation	Slight personal injury
	ATTENTION	Potentially dangerous situation	Material damage

1.4.2 Danger signs

	Meaning	Source and possible consequences of non-observance
	Electrical voltage	Electrical voltage causes serious physical injury or death.
	Raised load	Falling objects can result in serious physical injury or death.
	Heavy load	Heavy loads can result in serious back problems.
	Risk of slipping	Discharging pumped liquid and oils on the foundation or tread surfaces can cause falls with serious physical injury or death.
	Flammable substances	Discharging pumped liquid and oils can be easily inflammable and can result in serious burns.
	Hot surface	Hot surfaces can cause burns.

1.4.3 Symbols in this document

	Meaning
	Warning personal injury
	Safety instruction
▶	Request for action
1. ▶ 2. ▶ 3. ▶	Multi-step instructions for actions
⇨	Action result
↳	Cross-reference

2 Safety

2.1 Proper use

- ☐ Use the pump solely for transporting lubricating liquids that are chemically neutral and that do not contain gas or solid components.
- ☐ Use the pump only within the operating limits specified on the rating plate and in the chapter "Technical data". If the operating data does not match the specifications on the rating plate, please contact the manufacturer.
- ☐ The pump is designed specially for the operating pressure named by the customer. If the actual operating pressure deviates notably from this design pressure, damage to the pump can also arise within the specified operating limits. This applies both to notably higher as well as to notably lower operating pressures. Under no circumstances may the minimum pressure lie below 2 bar. In case of any doubt, please contact the manufacturer.

2.2 Foreseeable misuse

- ☐ Any use that extends beyond the proper use or any other use is misuse.
- ☐ The product is not suitable for pumping liquids outside the operational limits.
- ☐ Any bypassing or deactivation of safety equipment during operation is prohibited.

2.3 Obligations of the operator-owner

The operator-owner is the person who operates the product commercially or permits a third party to use it and who bears the legal responsibility for the product, the protection of the personnel and third parties during its operation.

The product is used in industrial applications. The operator-owner is therefore subject to the statutory obligations concerning occupational health and safety.

In addition to the safety instructions in these instructions, the regulations on safety, accident prevention and environmental protection respectively valid for the range of application of the product are to be observed.

2.4 Safety instructions

2.4.1 Fundamental safety instructions

The following safety instructions must be observed strictly:

- ☐ Read these operating instructions carefully and observe them.
- ☐ Read the operating instructions of the components carefully and observe them.
- ☐ Have work only carried out by qualified personnel/trained personnel.
- ☐ Wear personal protective equipment and work carefully.
- ☐ Pumped liquids can be subject to high pressure and can result in personal injury and damage to property in case of incorrect operation or damaged components.
- ☐ Pumped liquids can be hot, poisonous, combustible and caustic. Use corresponding protective equipment.
- ☐ Observe the associated data sheets and safety regulations when handling dangerous materials.
- ☐ Avoid skin contact with system parts carrying liquids at operating temperatures exceeding 60 °C.
- ☐ Collect any discharging pumped liquid safely and dispose of it in an environmentally compatible manner in accordance with the applicable local regulations. Neutralize residues.
- ☐ Keep the mounting surfaces, scaffolding, ladders, lifting platforms and tools clean in order to prevent slipping or stumbling.
- ☐ If pressurized or energized components are damaged, shut down the pump immediately. Replace the components or pump.

3 Identification

3.1 Type code

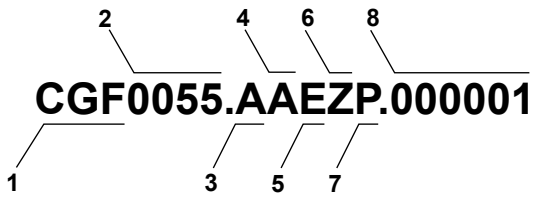

Fig. 1: Type code

Item	Classification	Description	
1	Type	CGF	☐ Pump with free shaft end ☐ Pump unit for flange mounting
		CGH	☐ Pump with free shaft end and pump bracket foot ☐ Pump unit on base frame for horizontal mounting
		CGV	☐ Pump with free shaft end and pedestal ☐ Pump unit with pedestal for vertical mounting
		CLE	☐ Cartridge pump
2	Size		Corresponds to delivery rate in [l/min] at 1450 min^{-1}

Item	Classification	Description	
3	Shaft seal	A	Standard mechanical seal
		B	Mechanical seal of hard material
		C	Standard radial shaft seal
		D	Magnetic coupling
		E	Mechanical seal with quench
		F	Shaft seal PTFE with quench
		G	High-temperature radial shaft seal
		H	Mechanical seal balanced
		J	Stuffing box packing
		L	Mechanical seal with throttle ring
		X	Special design
4	Bearing, heating	A	Inner bearing without heating system
		B	Outer bearing without heating system
		E	Inner bearing with fluid heating system
		F	Outer bearing with fluid heating system
		X	Special design
5	Cartridge housing material, outer housing material	A	Cartridge housing aluminium, outer housing GJS PN40
		B	Cartridge housing GJS, outer housing GJS PN40
		C	Cartridge housing aluminium, outer housing GJS PN63
		D	Cartridge housing GJS, outer housing GJS PN63
		E	Cartridge housing aluminium, outer housing steel PN63
		F	Cartridge housing GJS, outer housing steel PN63
		G	Cartridge housing aluminium, without outer housing
		H	Cartridge housing GJS, without outer housing
		X	Special design
6	Pressure stage, type, overflow valve material	A	0 – 9.9 bar, circulation valve, GJS (up to size CG210)
		B	0 – 5.9 bar, circulation valve, GJS (from size CG235)
		C	6.0 – 9.9 bar, circulation valve, GJS (from size CG235)
		D	10.0 – 15.9 bar, circulation valve, GJS
		E	16.0 – 24.9 bar, circulation valve, GJS
		F	25.0 – 40.0 bar, circulation valve, GJS
		G	0 – 9.9 bar, return valve, GJS (up to size CG210)
		H	0 – 5.9 bar, return valve, GJS (from size CG235)
		J	6.0 – 9.9 bar, return valve, GJS (from size CG235)
		K	10.0 – 15.9 bar, return valve, GJS
		L	16.0 – 24.9 bar, return valve, GJS
		M	25.0 – 40.0 bar, return valve, GJS
		N	Steel
		Z	Without valve
		X	Special design
7	Completion	P	Pump with free shaft end
		K	Pump with completion (without motor)
		F	Pump unit with completion
8	Version index		For internal administration

Tab. 2: Type code

3.2 Rating plate

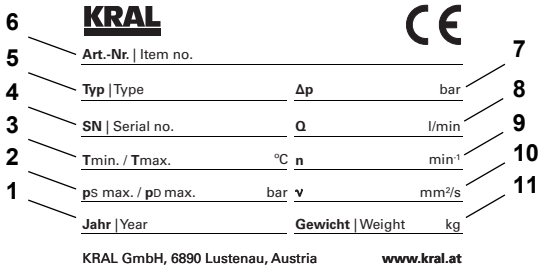

Fig. 2: Rating plate

1 Construction year
2 Max. allowable working pressure suction-side/Max. allowable working pressure pressure-side
3 Temperature range
4 Serial number
5 Type
6 Article number
7 Differential pressure
8 Nominal delivery rate
9 Rated speed
10 Nominal viscosity
11 Weight

4 Technical data

4.1 Operating limits

Parameter	Unit	Size 15 – 26	32 – 118	160 – 275	370 – 1301	1501 – 3550
Max. operating overpressure						
☐ Pump with flange PN40	[bar]	40				
☐ Pump with flange PN63	[bar]	63				
Max. temperature of the pumped liquid						
☐ Standard mechanical seal	[°C]	150				
☐ Mechanical seal of hard material	[°C]	180				
☐ Mechanical seal with quench	[°C]	150				
☐ Mechanical seal balanced	[°C]	180				
☐ Mechanical seal with throttle ring	[°C]	180				
☐ Shaft seal PTFE with quench	[°C]	80				
☐ Standard radial shaft seal	[°C]	150				
☐ High-pressure radial shaft seal	[°C]	90				
☐ Stuffing box packing	[°C]	80				
☐ Inside bearing	[°C]	180				
☐ Outer bearing	[°C]	180				
☐ Shaft seal special design	[°C]	Customer-specific, contact the manufacturer				
Min. temperature for pump materials	[°C]	-10				
Min. – max. ambient temperature	[°C]	-20 ... 50				
Viscosity min. – max.	[mm²/s]	1.5 – 10000				
Max. speed		Depending on viscosity, NPSH value and size				
Max. inlet pressure						
☐ Standard mechanical seal	[bar]	6				
☐ Mechanical seal of hard material	[bar]	10				
☐ Standard radial shaft seal	[bar]	1.5				
☐ Shaft seal special design	[bar]	Customer-specific, contact the manufacturer				

Tab. 3: Operating limits

4.2 Required NPSH values

The required NPSH values of the pump depend on the size, the viscosity of the pumped liquid and the speed.

The NPSH values are available on the website of the manufacturer:

www.kral.at/en/screw-pumps

4.3 Sound pressure level

Guide values at 1 m distance, 1450 min^{-1}, 10 bar

	Size							
	15 – 42	**55 – 118**	**160 – 275**	**370 – 450**	**550 – 880**	**851 – 1301**	**1501 – 1701**	**2250 – 3550**
	Max. sound pressure level ±3 [dB(A)]							
Pump	56.0	61.0	66.0	69.0	74.0	77.0	79.0	86.0
Motor	53.0	58.0	65.0	68.0	69.0	69.0	72.0	77.0
Pump unit	58.0	63.0	68.5	71.5	75.5	77.5	80.0	86.5

Tab. 4: Sound pressure level

4.4 Weights

The weight is specified on the rating plate.

5 Function description

5.1 Cartridge pump structure

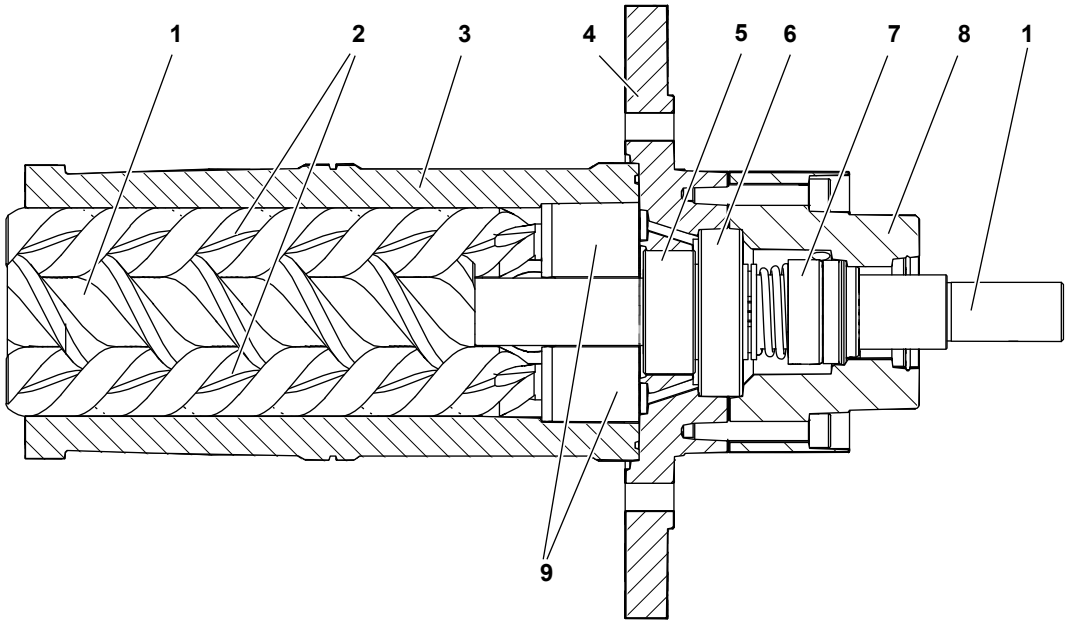

Fig. 3: CLE 15 – 660, CLE 880 structure, inner bearing

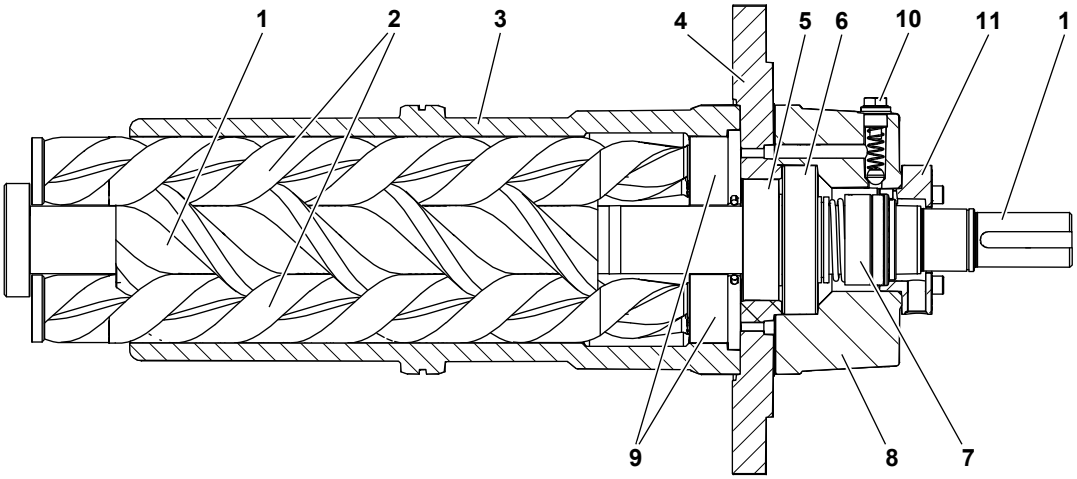

Fig. 4: CLE 851, CLE 951 – 3550 structure, inner bearing

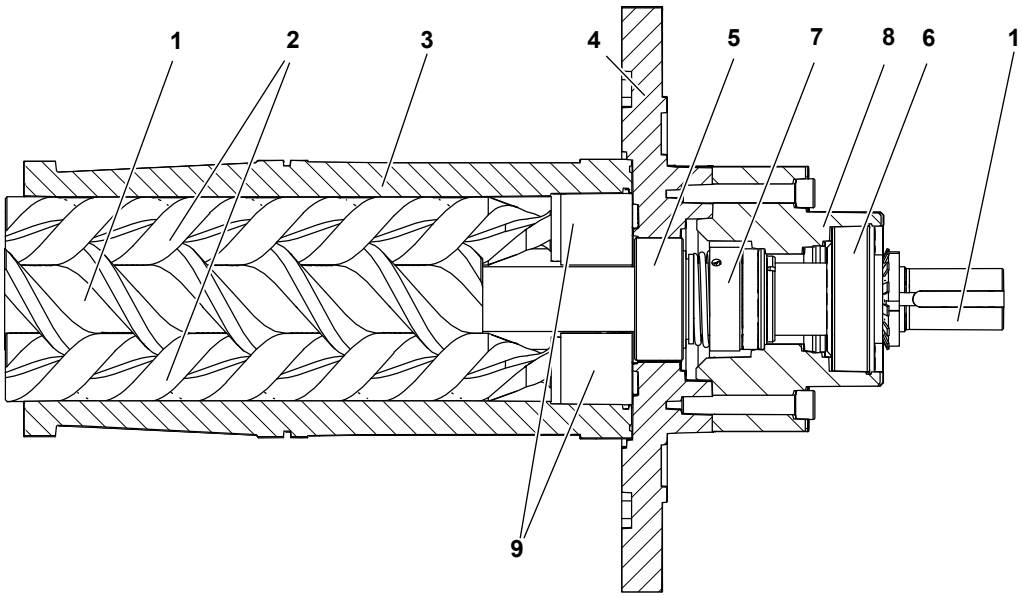

Fig. 5: CLE 32 – 660, CLE 880 structure, outer bearing

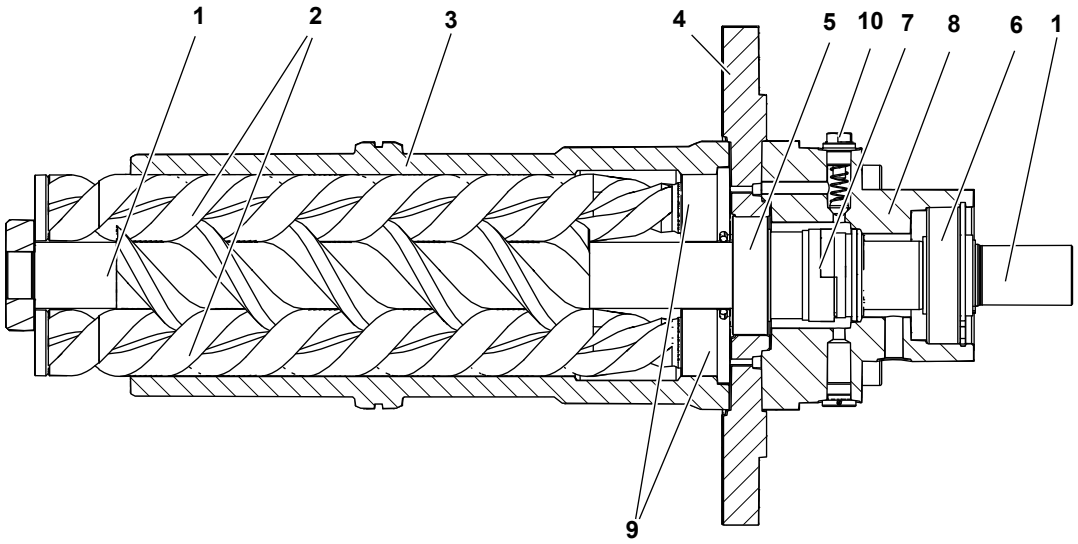

Fig. 6: Structure CLE 851, CLE 951 – 3550, outer bearing

1	Main screw	**7**	Shaft seal (mechanical seal)
2	Idle screw	**8**	Seal housing
3	Cartridge housing	**9**	Bearing bush
4	Flange cover	**10**	Counter-pressure valve
5	Balancing cylinder	**11**	Seal flange
6	Ball bearing		

5.2 Pump unit structure

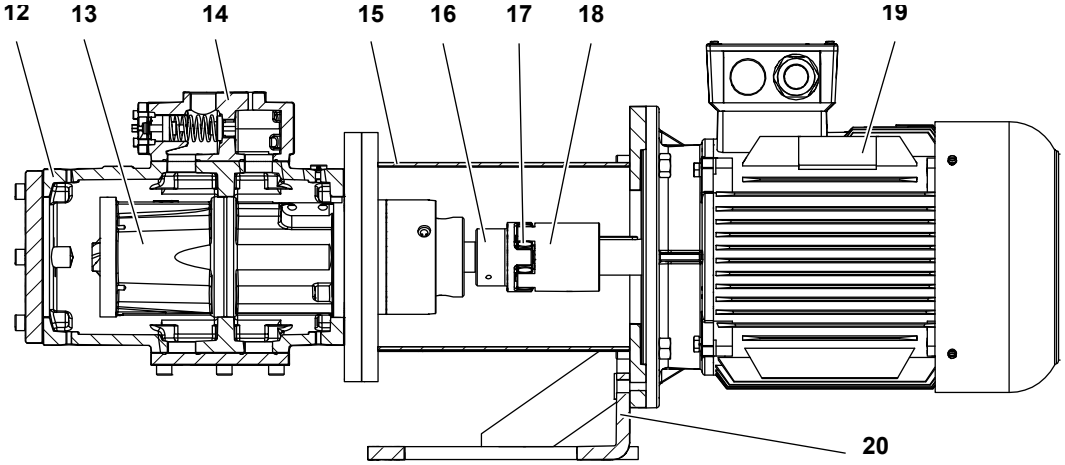

Fig. 7: Pump unit structure

12	Outer housing	**17**	Coupling intermediate ring
13	Cartridge pump	**18**	Motor-side coupling half
14	Overflow valve (optional)	**19**	Motor
15	Pump bracket	**20**	Pump bracket foot
16	Pump-side coupling half		

5.3 Functional principle

Screw pumps are rotating displacement pumps. The displacement effect results from three rotating screws **1** and **2** and the enclosing cartridge housing **3**. The cartridge housing is installed in an outer housing **12**.

Radial support of the screws is provided by the sliding contact in the cartridge housing that depends on lubrication by the pumped liquid. Screw pumps are therefore not suitable for dry running and can only be used up to specific pressure limits and viscosity limits. Due to the narrow gap dimensions, suspended solids cannot be pumped.

Axial support of the main screw **1** is provided by the ball bearing **6**. Various shaft seals **7** are available for sealing the main screw at the outlet from the housing. In order to reduce the pressure at the shaft seal, a balancing cylinder **5** is mounted at the main screw. The sealing chamber is connected with the suction chamber via a relief line.

An assembled overflow valve **14** (optional) protects the pump against excessive pressure that could cause housing parts to burst.

The default direction of the rotation of the main screw is clockwise viewed from the motor **19** and is marked on the pump flange by an arrow.

The flow direction is marked on the outer housing by two arrows.

5.4 Housing variants

Outer housings are offered in two different materials.

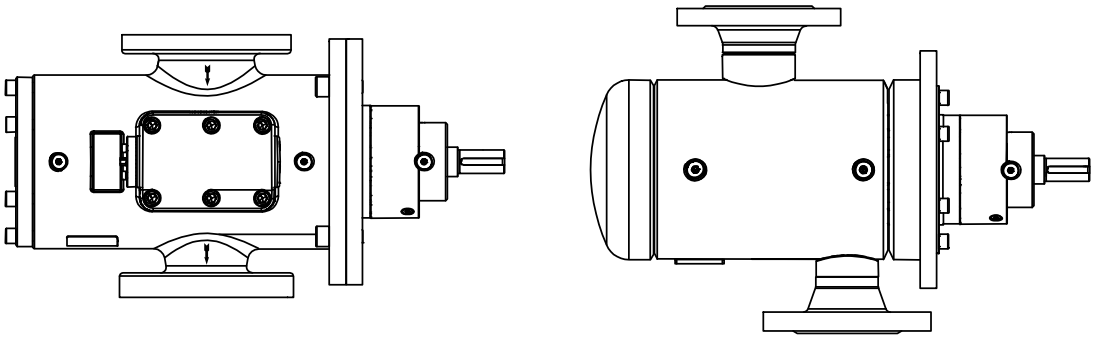

Fig. 8: Material housing variants: GJS (figure left), steel (figure right).

For the steel material housing variant all flow directions can be realized through different positioning of the flange connections.

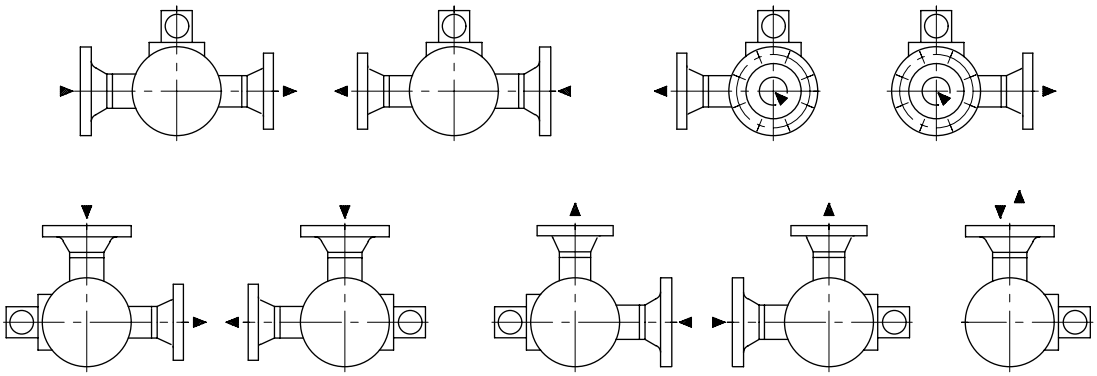

Fig. 9: Housing variants of flange connection

5.5 Shaft seal

The following types of shaft seals are offered:

- ☐ Mechanical seal standard or hard material
- ☐ Mechanical seal with quench
- ☐ Mechanical seal with throttle ring
- ☐ Radial shaft seal standard or high-temperature
- ☐ Mechanical seal cartridge

5.5.1 Seal variants inner bearing

Mechanical seal standard/hard material

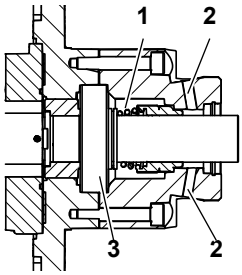

1	Mechanical seal
2	Leakage vent hole
3	Ball bearing

The lubrication of the mechanical seal **1** inevitably results in a low leak, that as a rule evaporates. However, at low-volatile liquids such as heavy fuel oil the leak becomes visible. The integrated leakage vent holes **2** allow draining of this leakage. The drainage through these holes has to be kept free. Dry running must be avoided at all costs, as the seal will overheat and be destroyed in a matter of seconds.

Mechanical seal with quench

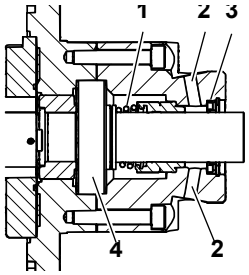

1 Mechanical seal
2 Leakage vent hole for quench tank connection
3 Radial shaft seal ring
4 Ball bearing

If low-volatile liquids or liquids that tend to harden when coming into contact with the atmosphere are used, a mechanical seal **1** can also be used in combination with a radial shaft seal ring **3**. This allows the sealing chamber to be connected via the leakage vent holes **2** with a quench tank so that the side of the mechanical seal facing away from the liquid will always be kept under the exclusion of air.

Mechanical seal with throttle ring

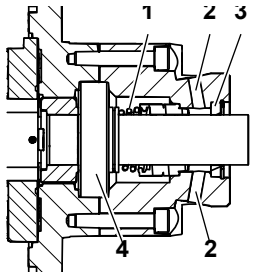

1 Mechanical seal
2 Leakage vent hole for quench tank connection
3 Throttle ring
4 Ball bearing

The throttle ring **3** serves as a secondary seal in connection with a mechanical seal **1**. This lightly contacting seal is for example used to seal a steam quench, whereby a certain leakage is emitted permanently via the throttle ring. Such a quench system is used for the heating and flushing of single action mechanical seals. The throttle ring furthermore reduces the leak rate at a total failure of the mechanical seal.

Radial shaft seal standard/high-temperature

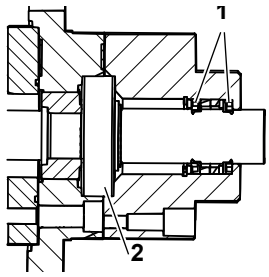

1 Radial shaft seal ring
2 Ball bearing

Depending on the material used, radial shaft seals can be used for temperatures of up to 150 °C (standard) or 90 °C (high pressure) respectively.
The used radial shaft seal rings **1** have one a lip each used to seal against liquid outlet and air inlet.

5.5.2 Seal variants outer bearing

Mechanical seal standard/hard material

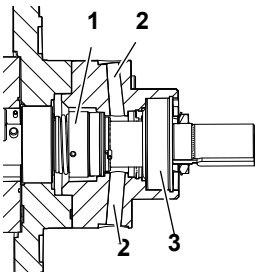

1 Mechanical seal
2 Leakage vent hole
3 Ball bearing

The lubrication of the mechanical seal **1** inevitably results in a low leak, that as a rule evaporates. However, at low-volatile liquids such as heavy fuel oil the leak becomes visible. The integrated leakage vent holes **2** allow draining of this leakage. The drainage through these holes has to be kept free. Dry running must be avoided at all costs, as the seal will overheat and be destroyed in a matter of seconds.

Mechanical seal with quench

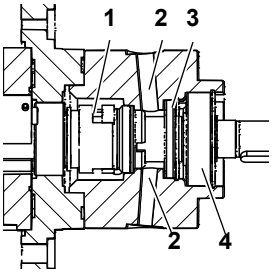

1 Mechanical seal
2 Leakage vent hole for quench tank connection
3 Radial shaft seal ring
4 Ball bearing

If low-volatile liquids or liquids that tend to harden when coming into contact with the atmosphere are used, a mechanical seal **1** can also be used in combination with a radial shaft seal ring **3**. This allows the sealing chamber to be connected via the leakage vent holes **2** with a quench tank so that the side of the mechanical seal facing away from the liquid will always be kept under the exclusion of air.

5.5.3 Mechanical seal cartridge

Follow the manufacturer's instructions (e.g. Flowserve, John Crane, EagleBurgmann, etc.).

5.6 Overflow valve (optional)

Overflow valve ↳ Accessories, Page 53.

5.7 Heating system (optional)

Heating ↳ Accessories, Page 53.

6 Transportation, storage

6.1 Dangers during transportation

The following safety instructions must be observed:

- ☐ Have all work only carried out by authorized transport personnel.
- ☐ Use intact and correctly dimensioned hoisting equipment.
- ☐ Ensure that the means of transport is in a flawless state.
- ☐ Ensure that the centre of gravity of the load is taken into consideration.
- ☐ Do not stand under raised loads.

6.2 Dangers during storage

The following safety instructions must be observed:

- ☐ Observe the storage conditions.

6.3 Unpacking and checking the state of delivery

Personnel qualification:	☐ Trained personnel

1. Upon delivery check the pump/pump unit for damage during transportation.
2. Report damage during transportation immediately to the manufacturer.
3. Dispose of packaging material in accordance with the locally applicable regulations.

6.4 Transporting the pump/pump unit

Personnel qualification:	☐ Transport personnel
Personal protective equipment:	☐ Work clothing ☐ Protective helmet ☐ Protective gloves ☐ Safety boots
Aids:	☐ Mobile crane, forklift, hoisting equipment ☐ Traverse if required

⚠ WARNING

Risk of injury and damage to equipment through falling and toppling parts.

- ▶ Use intact and correctly dimensioned hoisting equipment in accordance with the total weight to be transported.
- ▶ Select the lift points for the hoisting equipment in accordance with the centre of gravity and the weight distribution.
- ▶ Use at least two load ropes.
- ▶ In the case of vertical transportation secure the motor against tippling.
- ▶ Do not stand under raised loads.

ATTENTION

Damage to equipment through improper transportation.

- ▶ Protect the pump against damage, heat, sunlight, dust and moisture.

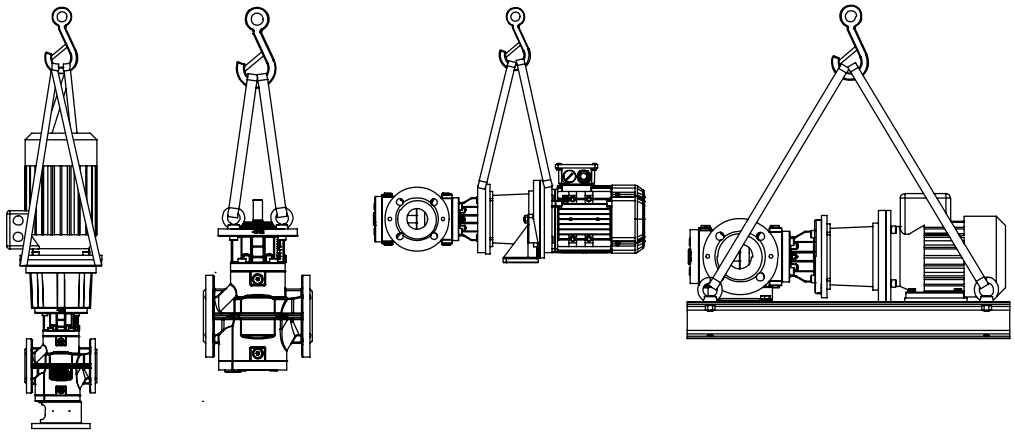

Fig. 10: Fastening of hoisting equipment– principle diagrams

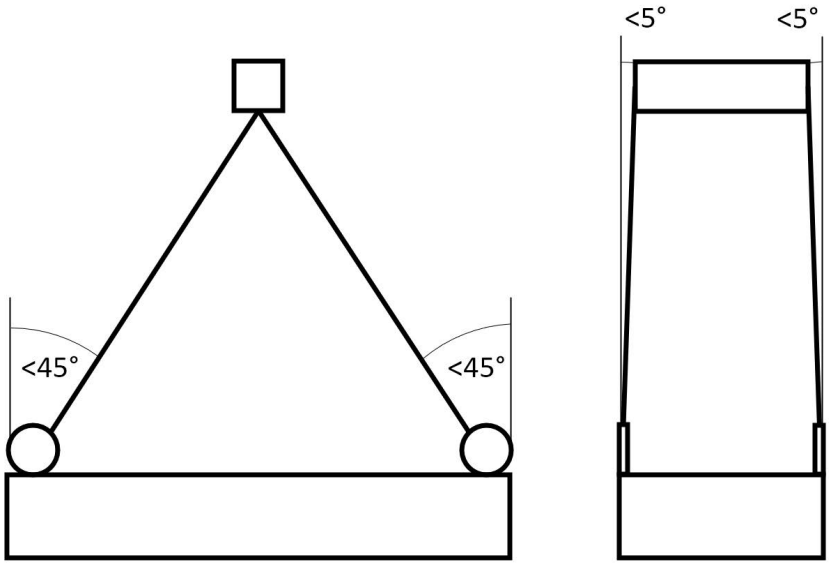

Fig. 11: Permissible angles for lifting gear

1. Attach the hoisting equipment to the pump/pump unit and tighten. Ensure that the centre of gravity lies exactly under the crane hook.
2. Lift the pump/pump unit carefully and put it down shock-free.
3. Before loosening the transport belts ensure that the pump/pump unit is secured against tilting.

6.5 Storing the pump

During the test run, the internal components of the pump are wetted with test oil, which has a preservative effect. Pressure connection and suction connection are closed with protective caps. Unless otherwise specified, the outer surfaces of the pump are preserved with a single-coat PU-based two-component paint.

The preservative applied at the factory will protect the pump for about six weeks, if it is stored in a dry and clean location.

The manufacturer offers a long-term preservation for storage times of up to 60 months. The pump is additionally packed in hermetically sealing anti-corrosion paper.

Personnel qualification:	☐ Transport personnel
Aids:	☐ Mobile crane, forklift, hoisting equipment

ATTENTION

Damage to equipment and corrosion if stored improperly and during longer standstills.

- ► Protect the pump against damage, heat, sunlight, dust and moisture.
- ► Protect against corrosion during longer standstill.
- ► Observe measures for storing and preservation.

1. Store cool and dry and protect against sunlight.
2. Ensure that the anti-corrosion paper is not damaged.
3. Observe the intervals for preservation Preservation, Page 16.

7 Preservation

7.1 Preservation table

Preservation has to be carried out additionally under the following conditions:

Type of delivery	Condition
Standard delivery	☐ Storage time exceeding six weeks ☐ Unfavourable storage conditions such as high humidity, salty air, etc.
Delivery with long-term preservation	☐ Opened or damaged packaging

Tab. 5: Conditions for additional preservation

7.2 Preserving the inner surfaces

Personnel qualification:	☐ Trained personnel
Personal protective equipment:	☐ Work clothing ☐ Protective gloves ☐ Safety boots
Aids:	☐ Preservative (acid-free and resin-free oil)

1. Open the packaging carefully. If the pump is protected additionally by anti-corrosion paper, ensure that it is not damaged.
2. Close the suction connection of the pump with a blind flange.
3. Pour the preservative into the pressure connection until it reaches approx. 2 cm under the rim, while slowly turning the main screw against the direction of rotation.
4. Close the pressure connection of the pump with a new blind flange.
5. Close the packaging carefully.
6. After about six months storage check the filling level of the preservative and if necessary top up.

7.3 Preserving the outer surfaces

Personnel qualification:	☐ Trained personnel
Personal protective equipment:	☐ Work clothing ☐ Face protection ☐ Protective gloves ☐ Safety boots
Aids:	☐ Calcium complex grease (for example TEVIER® GREASE WAWE 100 with adhesive additive) ☐ Castrol Rustilo DWX 21 or other preservative offering comparable protection

1. Brush calcium complex grease corrosion protection (for example TEVIER® FETT WAWE 100 with adhesive additive) onto the mounting surfaces.
2. Brush or spray preservative (for example Castrol Rustilo DWX 21) onto the process connections and remaining plain and unpainted parts.
3. At intervals of about six months check the preservation and if necessary repeat.

7.4 Removing the preservation

Personnel qualification:	☐ Trained personnel
Personal protective equipment:	☐ Work clothing ☐ Face protection ☐ Protective gloves ☐ Safety boots
Aids:	☐ Solvent ☐ Collection tank ☐ Steam-jet cleaning device with wax-dissolving additives

⚠ CAUTION

Risk of injury through discharging preservative.

- ▶ Wear personal protective equipment during all the work.
- ▶ Collect any discharging preservative safely and dispose of it in an environmentally compatible manner in accordance with the applicable local regulations.

1. ▶ Clean the outside of the pump with solvents, if necessary using a steam-jet cleaning device.
2. ▶ Remove the pressure-side blind flange carefully in order to reduce any pressure that may exist in the pump.
3. ▶ Drain the pump, collecting the preservative in a suitable vessel.
4. ▶ Remove the blind flange on the suction side.
5. ▶ To remove the residual preservative, flush the pump with the pumped liquid.

8 Installation, removal

8.1 Dangers during installation

The following safety instructions must be observed strictly:

- ☐ Have all work carried out only by authorized qualified personnel.
- ☐ Before installation ensure that the operating limits, NPSH values and ambient conditions are observed.
- ☐ Observe the tightening torques ↳ Appendix, Page 64.
- ☐ Ensure that all the components can be accessed and that maintenance work can be carried out easily.

8.2 Dangers during removing

The following safety instructions must be observed strictly:

- ☐ Have all work carried out only by authorized qualified personnel.
- ☐ Before beginning work, let the pump unit cool down to the ambient temperature.
- ☐ Collect any discharging pumped liquid safely and dispose of it in an environmentally compatible manner in accordance with the applicable local regulations.
- ☐ Ensure that the collection tank for discharging pumped liquid is sufficiently large.

8.3 Installing the pump

The pumps can be operated in horizontal and vertical installation position.

Note Soiling in the pipe system impair the service life of the pump. If the pipe system is flushed using the pump during the initial commissioning, an additional commissioning filter has to be installed temporarily before the pump at the system (mesh width: 0.02 mm).

Personnel qualification:	☐ Transport personnel ☐ Fitter
Personal protective equipment:	☐ Work clothing ☐ Protective helmet ☐ Protective gloves ☐ Safety boots
Aids:	☐ Mobile crane, forklift, hoisting equipment ☐ Traverse if required

⚠ WARNING

Risk of injury and damage to equipment through falling and toppling parts.

- ► Only fasten the pump on a stable load-bearing underground or stable load-bearing load support.
- ► Ensure that fastening elements and pipings are fastened sufficiently.

ATTENTION

Damage to motor through discharging pumped liquid.

- ► Do not install the pump above the motor.

ATTENTION

Damage to device through impurity in the pipe system.

- ► During welding work attach protective covers in front of the connecting flanges.
- ► Ensure when welding that welding beads and abrasive dust cannot get into the pipe system and the pump.
- ► Ensure that a commissioning filter is installed when the pipe system is flushed and cleaned using the pump.

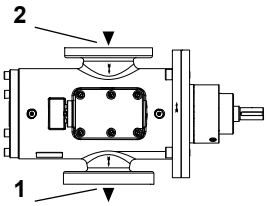

1 Pressure connection
2 Suction connection

Fig. 12: Flow direction

Requirement:

- ✓ Pump protection: Integrated overflow valve or system-side overflow valve/safety valve installed.
- ✓ Pump connections protected against soiling, for example by using the protective cover mounted in the factory
- ✓ If required, hoisting equipment prepared

1. ▶ Position the pump for installation while observing the motor position and flow direction on the pump's technical drawing (**1** pressure connection, **2** suction connection).
2. ▶ Fasten the pump with fastening elements securely on the underground.

8.4 Removing the pump

Personnel qualification:	☐ Transport personnel ☐ Fitter ☐ Electrician
Personal protective equipment:	☐ Work clothing ☐ Protective helmet ☐ Face protection ☐ Protective gloves ☐ Safety boots
Aids:	☐ Mobile crane, forklift, hoisting equipment ☐ Collection tank

⚠ DANGER

Risk of death resulting from electric shock.

- ► Ensure that the electrical power supply is de-energized and is secured against being switched back on.
- ► Observe the operating instructions of the electrical components.

⚠ DANGER

Risk of death through emitted pumped liquid.

Pumped liquids can be hot, poisonous, combustible and caustic and can spray out under high pressure.

- ► Wear personal protective clothing during all the work. Ensure face protection.
- ► Before beginning work, let the pump unit cool down to the ambient temperature.
- ► Ensure that the pump is depressurized.
- ► Collect any discharging pumped liquid safely and dispose of it in an environmentally compatible manner in accordance with the applicable local regulations.

Requirement:

✓ Pump unit cooled down to the ambient temperature

✓ Pump unit disconnected from the electrical power supply, deenergized and secured against being switched back on

1. ▶ Close the pressure-side and suction-side shut-off devices.
2. ▶ Empty the pump at the lowest point. Collect the discharging pumped liquid in a collection tank.
3. ▶ Dismantle the pressure-side and suction-side connecting flanges.
4. ▶ Disconnection the pump unit from the pipe system and empty it. Collect any discharging pumped liquid.
5. ▶ Screw out the fastening elements used to fasten the pump.
6. ▶ Dismantle the pump unit on site or transport it to a suitable location ↳ Transportation, storage, Page 14.

9 Connection

9.1 Dangers during connection work

The following safety instructions must be observed strictly:

- ☐ Have all work on the pump and pipe system only carried out by authorized qualified personnel.
- ☐ Ensure that impurities cannot get into the pump and pipe system.
- ☐ Ensure that mechanical connections are mounted stress-free.
- ☐ Observe the tightening torques ↳ Appendix, Page 64.
- ☐ Have all the work on the electrical equipment only carried out by electricians.
- ☐ Before beginning work on the pump ensure that the electrical power supply is deenergized and is secured against being switched back on.
- ☐ If the insulation of the electrical cables or wires is damaged, disconnect the power supply immediately.

9.2 Connecting the pump to the pipe system

Personnel qualification:	☐ Transport personnel ☐ Fitter
Personal protective equipment:	☐ Work clothing ☐ Protective gloves ☐ Protective helmet ☐ Safety boots
Aids:	☐ Mobile crane, forklift, hoisting equipment

ATTENTION

Damage to device through impurity in the pipe system.

- ► During welding work attach protective covers in front of the connecting flanges.
- ► Ensure when welding that welding beads and abrasive dust cannot get into the pipe system and the pump.
- ► Ensure that a commissioning filter is installed when the pipe system is flushed and cleaned using the pump.

ATTENTION

Damage to device through mechanical stress.

- ► Ensure that the pump is mounted free of mechanical stresses in the pipe system.
- ► Observe the tightening torques.

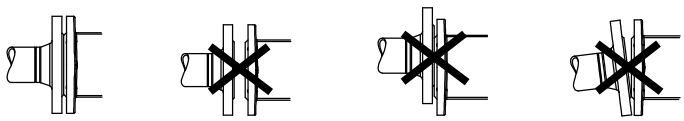

Fig. 13: Connection to pipe system

1. ▶ Turn the pump shaft or the fan impeller of the motor. This tests that the pump runs smoothly. If the pump shaft cannot be turned by hand, remedy the fault before installing the pump ↳ Troubleshooting, Page 50.
2. ▶ Before carrying out welding work mount a protective cover on the suction connection and pressure connection.
3. ▶ Place the piping in position and support the weight of the piping.
4. ▶ Check the linear, height and angular offset and correct if necessary.
   ⇨ If the screws tighten easily, this is a sure sign that the installation is stress-free.
5. ▶ Tighten the connecting screws crosswise with torque, Table of tightening torques ↳ Appendix, Page 64.

9.3 Insulating the pump

Personnel qualification:	☐ Fitter
Personal protective equipment:	☐ Work clothing ☐ Protective gloves ☐ Safety boots
Aids:	☐ Insulation material

⚠ WARNING

Hot surface.

Touching of uninsulated hot surfaces results in burns.

► Insulate components and pipings in which hot liquids (> 60 °C) flow before commissioning.

→ Before commissioning, carefully insulate all potentially hot surfaces of the pump and the connected piping or provide suitable protection against accidental contact.

9.4 Assembling the pump and motor

Personnel qualification:	☐ Fitter
Personal protective equipment:	☐ Work clothing ☐ Protective gloves ☐ Safety boots

ATTENTION

Damage to coupling and bearing through incorrect alignment of the coupling.

► To guarantee a long service life of the coupling, align shaft ends exactly.

► After assembly check permissible displacement figures of the coupling according to table below.

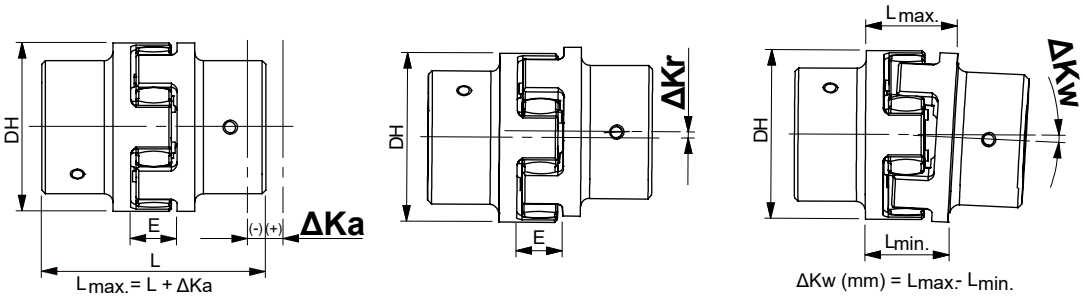

Fig. 14: Coupling alignment measuring points

Outer diameter	Coupling distance	Max. axial displacement	Max. radial displacement	Max. angular displacement	
DH	E	ΔKa	ΔKr	ΔKw	
[mm]	[mm]	[mm]	[mm]	[°]	[mm]
40	16	-0.5/ +1.2	0.20	1.2	0.8
55	18	-0.5/ +1.4	0.22	0.9	0.9
65	20	-0.7/ +1.5	0.25	0.9	1.1
80	24	-0.7/ +1.8	0.28	1.0	1.4
95	26	-1.0/ +2.0	0.32	1.0	1.7
120	30	-1.0/ +2.2	0.38	1.1	2.3
135	35	-1.0/ +2.6	0.42	1.2	2.7
160	40	-1.5/ +3.0	0.48	1.2	3.3

Tab. 6: Limit values for aligning the shaft coupling

1. Check the radial displacement **ΔKr** of the coupling using a hairline gauge and feeler gauge. Check several points along the periphery of the coupling.
2. Check the angular displacement **ΔKw** of the coupling using a hairline gauge.
3. Check the axial displacement **ΔKa** of the coupling using a slide gauge or feeler gauge.
4. If the limit values of the above table are exceeded, loosen the fastening of the pump or motor and move pump or motor in order to reduce the respective offset.

9.5 Connecting the pump unit to the power supply

Personnel qualification:	☐ Electrician
Aids:	☐ Operating instructions of the motor ☐ Motor circuit diagram

⚠ DANGER

Risk of death resulting from electric shock.

- ► Ensure that the electrical power supply is de-energized and is secured against being switched back on.
- ► Before commissioning ensure correct grounding and equipotential bonding.
- ► Observe the operating instructions of the electrical components.

1. Ensure that the operating data on the rating plate of the motor agree with the operating data of the pump and with the local power supply.
2. Carefully earth the pump bracket foot, base frame or pedestal via the screwing.
3. Connect the motor in accordance with the operating instructions and circuit diagram in the motor terminal block.
4. When connecting the pump unit to the complete system continue equipotential bonding.

10 Operation

10.1 Dangers during operation

The following safety instructions must be observed strictly:

- ☐ Have all work carried out only by authorized qualified personnel.
- ☐ Before commissioning ensure that a safety valve has been installed in the pipe system on the pressure side before the first shut-off device.
- ☐ Before commissioning, make sure that the suction line and pump are filled.
- ☐ Pumped liquids can be hot, poisonous, combustible and caustic. Use corresponding protective equipment.
- ☐ Ensure that the pump station is only operated within the operating limits.
- ☐ Wear hearing protection if you work for a longer time directly at the pump.
- ☐ Ensure that the maximum permissible system pressure is not exceeded.
- ☐ Ensure that during cooling down or heating up the pump is only subjected to slow temperature changes.
- ☐ Ensure that existing safety equipment is not bypassed or activated during operation.
- ☐ Before decommissioning ensure that the electrical power supply is deenergized and is secured against being switched back on.

10.2 Commissioning

10.2.1 Cleaning the pipe system

Note Soiling in the pipe system impair the service life of the pump. If the pipe system is flushed using the pump during the initial commissioning, an additional commissioning filter has to be installed temporarily before the pump at the system.

Personnel qualification:	☐ Fitter
Personal protective equipment:	☐ Work clothing ☐ Protective gloves ☐ Safety boots

ATTENTION

Damage to equipment through additional pressure loss in the commissioning filter/commissioning strainer.

- ► Calculate the flow resistance and determine the remaining pump intake.
- ► Monitor the suction-side pressure.
- ► Check the commissioning filter/commissioning strainer regularly.

Requirement:
✓ If required, commissioning filter installed (mesh width 0.02 mm)

1. ▶ Clean the complete pipe system before commissioning in order to protect the pump.
2. ▶ Flush the pipe system at least 50 – 100 hours.

10.2.2 Filling and venting the pump

Possibilities

There are various ways to fill the pump:
☐ Via the suction connection or pressure connection
☐ Via the vent holes

Note Check the pump to determine the best way to fill it depending on the installation position.

Vent holes

Principle diagrams

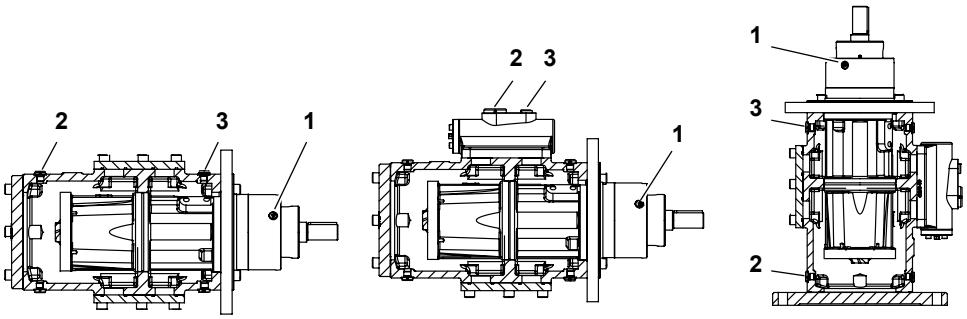

CGF/CGH | CGF/CGH with overflow valve | CGV with overflow valve

1 Vent hole sealing chamber
2 Suction-side vent hole
3 Pressure-side vent hole

Filling and venting the pump via the suction connection or pressure connection

Personnel qualification:	☐ Fitter
Personal protective equipment:	☐ Work clothing ☐ Face protection ☐ Protective gloves ☐ Safety boots

⚠ DANGER

Risk of death through discharging pumped liquid.

Pumped liquids can be hot, poisonous, combustible and caustic and can spray out under high pressure.

- ▶ Wear personal protective equipment during all the work. Ensure face protection.
- ▶ Collect any discharging pumped liquid safely and dispose of it in an environmentally compatible manner in accordance with the applicable local regulations.

1. Open the screw plug of the vent hole **1** by a maximum of 2 rotations so that air can escape during the filling process.
2. Open the suction-side or pressure-side shut-off device and fill the pump via the suction connection or pressure connection until pumped liquid is emitted at the vent hole **1**.
3. While filling, turn the pump shaft or the motor fan impeller manually in order to speed up the filling process:
   Filling via suction connection: Turn the pump shaft in the direction of the arrow on the pump flange.
   Filling via pressure connection: Turn the pump shaft against the direction of the arrow on the pump flange.
4. Retighten the screw plug of the vent hole **1**.

Filling and venting the pump via the vent hole

Personnel qualification:	☐ Fitter
Personal protective equipment:	☐ Work clothing ☐ Face protection ☐ Protective gloves ☐ Safety boots

⚠ WARNING

Risk of injury through emitted pumped liquid.

Pumped liquids can be hot, poisonous, combustible and caustic.

- ▶ Wear personal protective clothing during all the work. Ensure face protection.
- ▶ Collect any discharging pumped liquid safely and dispose of it in an environmentally compatible manner in accordance with the applicable local regulations.

Requirement:

✓ Shut-off devices in the suction line and pressure line closed

1. Open the screw plug of the vent hole **1** by a maximum of 2 rotations so that air can escape during the filling process.
2. Remove the screw plug of the pressure-side vent hole **3**.
3. Fill the pump via the pressure-side vent hole **3** until the pumped liquid is emitted from the vent hole **1**.
4. While filling, turn the pump shaft or the motor fan impeller manually in order to speed up the filling process:
   Filling the suction chamber: Turn the pump shaft against the direction of the arrow on the pump flange.
   Filling the sealing chamber: Turn the pump shaft in the direction of the arrow on the pump flange. To speed up the filling of the sealing chamber, fill the sealing chamber of the pump via the vent hole **1** until pumped liquid is emitted.
5. Retighten the screw plug of the pressure-side vent hole **3**.
6. Retighten the screw plug of the vent hole **1**.

Filling and venting the seal-less pump

Personnel qualification:	☐ Fitter
Personal protective equipment:	☐ Work clothing ☐ Face protection ☐ Protective gloves ☐ Safety boots

⚠ DANGER

Risk of death through discharging pumped liquid.

Pumped liquids can be hot, poisonous, combustible and caustic and can spray out under high pressure.

- ► Wear personal protective equipment during all the work. Ensure face protection.
- ► Collect any discharging pumped liquid safely and dispose of it in an environmentally compatible manner in accordance with the applicable local regulations.

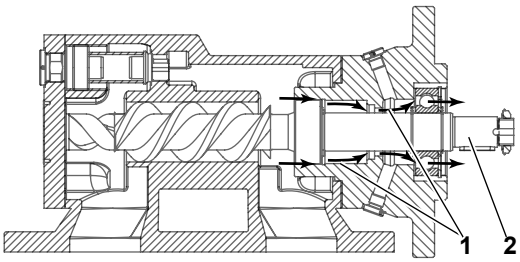

1 Pumped liquid and air outlet
2 Shaft end

Fig. 15: Seal-less pump - priniciple diagram

1. Open the suction-side or pressure-side shut-off valve and fill the pump via the suction connection or pressure connection.
   ⇨ As the pump does not have a seal, pumped liquid escapes at the shaft end **2**.
2. Close the suction-side or pressure-side shut-off valve to prevent backflow.
3. Pressurise the pump.
   ⇨ Air and pumped liquid **1** exit via the seal-less shaft end.
4. Maintain the venting process for two minutes.

10.2.3 Checking the direction of rotation

The direction of rotation is indicated by an arrow on the pump flange/pump housing. The direction of rotation of the motor specifies the direction of rotation of the pump. The fan impeller of the motor must rotate in the same direction in which the arrow for the direction of rotation on the pump flange points.

Note Standard direction of rotation: clockwise (viewed from the motor)

Personnel qualification:	☐ Fitter

ATTENTION

Dry running can damage pump equipment.

- ► Ensure that the pump is filled properly.
- ► Switch the pump on for a maximum of one second and then off again immediately.

1. Switch on the power supply and then turn it off again immediately.

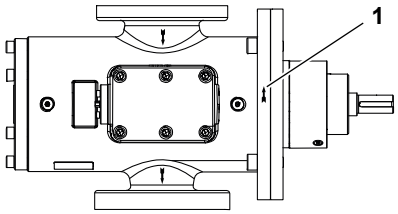

2. Compare the direction of rotation of the fan impeller with the arrow for the direction of rotation **1**.
3. If the directions do not match, swap the two electrical connection phases. Repeat Steps 1 and 2.

10.2.4 Commissioning the pump

Personnel qualification:	☐ Fitter ☐ Electrician
Personal protective equipment:	☐ Work clothing ☐ Face protection ☐ Protective gloves ☐ Safety boots
Aids:	☐ Collection tank

⚠ DANGER

Risk of death resulting from bursting components and discharging pumped liquid.

As a result of impermissibly high pressure, components can burst with high energy, for example through the pressure-side pipe system being shut off.

- ► Wear personal protective equipment during all the work.
- ► System protection: Before carrying out commissioning ensure that a safety valve is installed in the pressure-side pipe system at the system end.
- ► Pump protection: Ensure before commissioning that an integrated overflow valve or system-side overflow valve/safety valve is installed.

⚠ WARNING

Risk of injury through emitted pumped liquid.

Pumped liquids can be hot, poisonous, combustible and caustic.

- ► Wear personal protective clothing during all the work. Ensure face protection.
- ► Collect any discharging pumped liquid safely and dispose of it in an environmentally compatible manner in accordance with the applicable local regulations.

⚠ WARNING

Hot surface.

Touching of uninsulated hot surfaces results in burns.

- ► Insulate components and pipings in which hot liquids (> 60 °C) flow before commissioning.

⚠ WARNING

Danger of injury through rotating parts.

- ► Ensure that the coupling protection is mounted.

ATTENTION

Dry running can damage pump equipment.

- ► Ensure that the pump and the connected pipe system are filled properly.
- ► If the pump does not deliver after 10 – 15 seconds, abort commissioning.

Requirement:

- ✓ Pump unit set up correctly
- ✓ Coupling aligned correctly ↳ Connection, Page 20
- ✓ Connections connected sealingly
- ✓ Motor connected correctly
- ✓ Pipe system is free of impurities
- ✓ System protection: Safety valve in accordance with EN ISO 4126-1 installed in the pressure-side pipe system before the first shut-off device
- ✓ Pump protection: Integrated overflow valve or system-side overflow valve/safety valve installed.
- ✓ Pump filled with pumped liquid
- ✓ Shut-off devices in the suction line and pressure line opened

1. ▶ Turn the pump shaft or the fan impeller of the motor. This tests that the pump runs smoothly. If the pump shaft cannot be turned by hand, remedy the fault. ↳ Troubleshooting, Page 50
2. ▶ Switch on the pump unit.
   ⇨ The pump delivers when the pressure on the pressure side of the pump rises or a flow indicator at the system side triggers.
3. ▶ If the pump does not deliver after 10 – 15 seconds of operation, abort commissioning. Eliminate the cause for the fault and only then continue with commissioning. Take the information from the fault table into account ↳ Troubleshooting, Page 50.
4. ▶ Run the pump for a few minutes to allow the pipe system to vent fully.
   ⇨ The pipe system is fully vented when the pump operating noise is smooth and a pressure gauge on the pressure side shows no more fluctuations.
5. ▶ Checking overflow valve functions ↳ During operation, Page 27.

10.3 During operation

10.3.1 Checking the operating pressure

Personnel qualification:	☐ Trained personnel

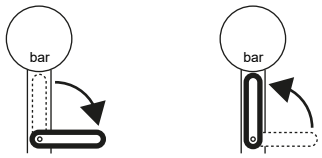

Fig. 16: Pressure gauge shut-off valves closed/open - principle diagram

ATTENTION

Leak in the pressure gauge through permanently opened pressure gauge shut-off valve.

- ► Close the pressure gauge shut-off valve immediately after completing reading.

1. ▶ Open the pressure gauge shut-off valve.
2. ▶ Read the operating pressure and close the pressure gauge shut-off valve.

10.3.2 Monitoring the filter and/or strainer

Note The manufacturer recommends protecting the pump against soiling by means of a filter and/or strainer installed at the system end (mesh width 0.5 mm). The degree of soiling of the filter and/or the strainer can be monitored by means of a suction-side pressure gauge or a differential pressure indicator.

Personnel qualification:	☐ Trained personnel

1. ▶ After commissioning monitor the degree of soiling of the filter and/or strainer by means of a suction-side pressure gauge or a differential pressure indication.

2. Also check the filters/strainers in the event of a pressure drop on the suction side. Observe the dimensioning data of the manufacturer of the filters and/or strainers.
3. Check the suction-side pressure every two weeks during operation.
4. Regularly check the magnetic separator in the filter/strainer during operation and clean it if necessary.

10.3.3 Set overflow valve (optional) and test function

Set overflow valve and test function Accessories, Page 53.

10.3.4 Switching off the pump unit

Personnel qualification:	☐ Trained personnel

⚠ DANGER

Risk of death resulting from bursting components and discharging pumped liquid.

If shut-off devices are closed, thermal expansion of the enclosed pumped liquid can cause a significant pressure increase. Parts or components may burst with considerable energy.

- Keep a shut-off device slightly open during operational interruptions or when the system is at a standstill.
- If necessary, fit a pressure relief device (safety valve) into the piping system.

ATTENTION

Seal damage through pressurizing during standstill.

- Ensure that the maximum permissible system pressure is not exceeded.

1. Switch off the motor.
2. Close the pressure-side shut-off device.

10.4 Decommissioning

10.4.1 Decommissioning the pump

Decommissioning is an operation interruption that requires different measures depending on the scope and duration of the interruption as well as the properties of the pumped liquid.

Personnel qualification:	☐ Fitter ☐ Electrician
Personal protective equipment:	☐ Work clothing ☐ Protective gloves ☐ Safety boots ☐ Collection tank

⚠ WARNING

Risk of injury through emitted pumped liquid.

Pumped liquids can be hot, poisonous, combustible and caustic.

- Wear personal protective clothing during all the work. Ensure face protection.
- Collect any discharging pumped liquid safely and dispose of it in an environmentally compatible manner in accordance with the applicable local regulations.

ATTENTION

Damage to equipment through excessively fast temperature change.

- ► Subject the pump only to slow temperature changes.
- ► Under no circumstances heat the pump with an open flame.

→ Carry out the following measures in case of operation interruptions:

Scope of the operation interruption	Measure
☐ Shutting down the pump for longer period	→ Depending on the pumped liquid
☐ Draining the pump	→ Close the pressure-side and suction-side shut-off devices.
☐ Dismantling the pump	→ Disconnect the motors from the power supply and secure against being switched back on.
☐ Store the pump	→ Observe measures for storing and preservation ↳ Transportation, storage, Page 14.

Tab. 7: Measures during operation interruptions

Behaviour of the pumped liquid	Duration of the operation interruption	
	Short	Long
☐ Solids sediment	→ Rinse the pump.	→ Rinse the pump.
☐ Congealed/frozen ☐ No corrosive burden	→ Heat or drain the pump.	→ Drain the pump.
☐ Congealed/frozen ☐ Corrosive burden	→ Heat or drain the pump.	1. → Drain the pump. 2. → Preserve the pump.
☐ Remains liquid ☐ No corrosive burden	–	–
☐ Remains liquid ☐ Corrosive burden	–	1. → Drain the pump. 2. → Preserve the pump.

Tab. 8: Measures depending on the behaviour of the pumped liquid

→ Drain the pump via the pressure line, suction line, vent screws and screw plugs.

10.5 Recommissioning

10.5.1 Recommissioning the pump

→ Depending on the extent and duration of the interruption of operation, carry out steps as for commissioning ↳ Commissioning, Page 22.

11 Maintenance

11.1 Dangers during maintenance

The following safety instructions must be observed strictly:

- ☐ Have all work carried out only by authorized qualified personnel.
- ☐ Before beginning work, let the pump unit cool down slowly to the ambient temperature. Avoid rapid temperature changes.
- ☐ Pumped liquids can be hot, poisonous, combustible and caustic. Use corresponding protective equipment.
- ☐ Collect any discharging pumped liquid safely and dispose of it in an environmentally compatible manner in accordance with the applicable local regulations.
- ☐ Ensure that the collection tank for discharging pumped liquid is sufficiently large.
- ☐ Observe the operating instructions and data sheets of the components.

11.2 Required maintenance

The service life depends on the observance of the operating conditions of the pump and the requirements from the operating instructions of the components.

Component	Required maintenance	Cycle
Filter/strainer (system side)	☐ Check of the suction-side pressure	2 weeks
Pump	☐ Visual inspection ☐ Acoustic inspection	4 weeks
Leakage vent hole	☐ Visual inspection ☐ If required, clean	4 weeks
Overflow valve	☐ Function test ↳ During operation, Page 27	≤ 5 years

Tab. 9: Required maintenance

11.3 Ball bearing (inner bearing)

The ball bearings used are lubricated by the pumped liquid. Maintenance is therefore not required. The manufacturer recommends renewing the ball bearings every 20,000 operating hours. When using the pump in lubrication oil applications a bearings replacement at the latest after 5 years (40000 h) is sufficient.

11.4 Ball bearing (outer bearing)

The ball bearings used are lifetime lubricated. Maintenance is therefore not required. The manufacturer recommends renewing the ball bearings every 20,000 operating hours.

11.5 Maintaining the pump

Personnel qualification:	☐ Fitter
Personal protective equipment:	☐ Work clothing ☐ Protective gloves ☐ Safety boots ☐ Face protection

⚠ WARNING

Risk of injury through emitted pumped liquid.

Pumped liquids can be hot, poisonous, combustible and caustic.

- ▶ Wear personal protective clothing during all the work. Ensure face protection.
- ▶ Collect any discharging pumped liquid safely and dispose of it in an environmentally compatible manner in accordance with the applicable local regulations.

1. ▶ Check the pump visually and acoustically every four weeks.
2. ▶ If there are signs of wear, eliminate the cause ↳ Servicing, Page 31.

11.6 Cleaning the leakage vent hole

The regular small amounts of leakage can result in deposits that can prevent free draining of further leakage liquids after a longer operating period.

Personnel qualification:	☐ Fitter
Personal protective equipment:	☐ Work clothing ☐ Face protection ☐ Protective gloves ☐ Safety boots

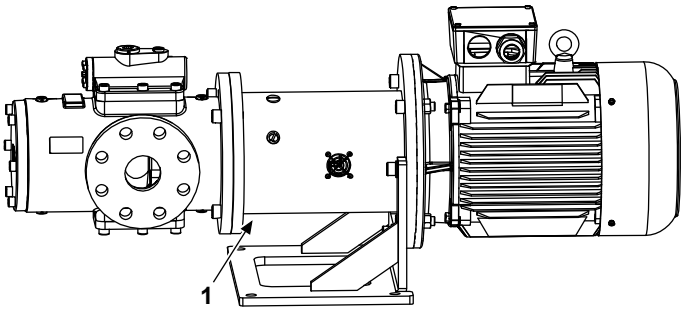

→ To ensure the permeability of the leakage vent hole **1** insert a flexible soft arbour into the leakage vent hole.

12 Servicing

12.1 Instruction videos

You can also watch the instruction videos at https://www.kral.at/en/services/pump-services/instruction-videos/.

12.2 Dangers during servicing

The following safety instructions must be observed strictly:

- ☐ Have all work carried out only by authorized qualified personnel.
- ☐ Before beginning work on the pump ensure that the electrical power supply is deenergized and is secured against being switched back on.
- ☐ Before beginning work, let the pump unit cool down slowly to the ambient temperature. Avoid rapid temperature changes.
- ☐ Pumped liquids can be hot, poisonous, combustible and caustic. Use corresponding protective equipment.
- ☐ Ensure that the pump is depressurized and that shut-off devices are not operated uncontrolled.
- ☐ Collect any discharging pumped liquid safely and dispose of it in an environmentally compatible manner in accordance with the applicable local regulations.
- ☐ Ensure that the collection tank for discharging pumped liquid is sufficiently large.
- ☐ Observe the tightening torques ↳ Appendix, Page 64.
- ☐ Observe the operating instructions and data sheets of the components.

12.3 Wear

12.3.1 Signs of wear

The following table lists signs of progressive wear of individual pump elements:

Finding	Cause	Elimination
Increased running noises	Incipient damage to bearing	→ Replace the ball bearing.
Increased leaking	Incipient damage to seal	→ Replace the shaft seal.
Deposits at the shaft seal (only applies for mechanical seal)	Low-volatile liquids	→ Clean the mechanical seal.
Increased play in the coupling	Advanced wear of the coupling intermediate ring	→ Replace the coupling intermediate ring.
Reduction in the delivery rate or pressure under constant operating conditions	Advanced wear of screws and housing	→ Replace the pump.

Tab. 10: Signs of wear

12.3.2 Shaft seal

Shaft seals are subject to natural wear that depends strongly on the respective conditions of use. General statements about the service life can therefore not be given.

Mechanical seal

In case of strong soiling through solidified or sticky leakage residues the manufacturer recommends that you dismantle the mechanical seal completely and clean it, together with the inner surfaces of the pump housing.

12.4 Replacing the coupling

12.4.1 Removing the coupling

Personnel qualification:	☐ Fitter
Personal protective equipment:	☐ Work clothing ☐ Protective gloves ☐ Safety boots
Aids:	☐ Extractor

⚠ WARNING

Risk of injury and damage to equipment through falling and toppling parts.

- ► Use intact and correctly dimensioned hoisting equipment in accordance with the total weight to be transported.
- ► Select the lift points for the hoisting equipment in accordance with the centre of gravity and the weight distribution.
- ► Use at least two load ropes.
- ► In the case of vertical transportation secure the motor against tippling.
- ► Do not stand under raised loads.

Requirement:

✓ Pump unit disconnected from the electrical power supply, deenergized and secured against being switched back on

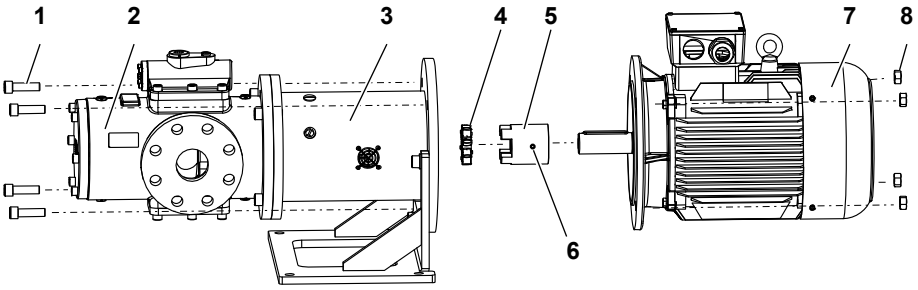

1. ▶ Secure the motor with eye bolts/hoisting equipment in such a way that the motor can be pulled out horizontally.
2. ▶ Remove the socket screws **1** between the motor **7** and pump bracket **3** and pull out the motor.
3. ▶ Loosen the fixing screw **6** at the motor-side coupling half **5**.
4. ▶ Remove the coupling intermediate ring **4** and pull off the coupling half using an extractor.

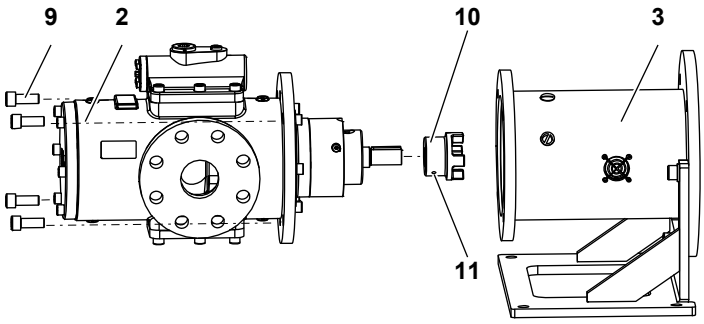

5. ▶ Secure the pump **2** with eye bolts/hoisting equipment in such a way that the pump bracket can be pulled exactly horizontally from the pump.

6. Pull out the socket screws **9** between the pump and pump bracket and remove the pump bracket.
7. Loosen the fixing screw **11** at the pump-side coupling half **10** and pull off the coupling half using an extractor.

12.4.2 Installing the coupling

Personnel qualification:	☐ Fitter
Personal protective equipment:	☐ Work clothing ☐ Protective gloves ☐ Safety boots
Aids:	☐ Measuring stick ☐ Lubricating grease

Note The coupling halves can be mounted more easily if they are heated to 80 °C – 100 °C.

Requirement:
✓ Position of the pump in the pipe system secured with eye bolts/hoisting equipment

1. Oil the shaft of the pump with lubricating grease.

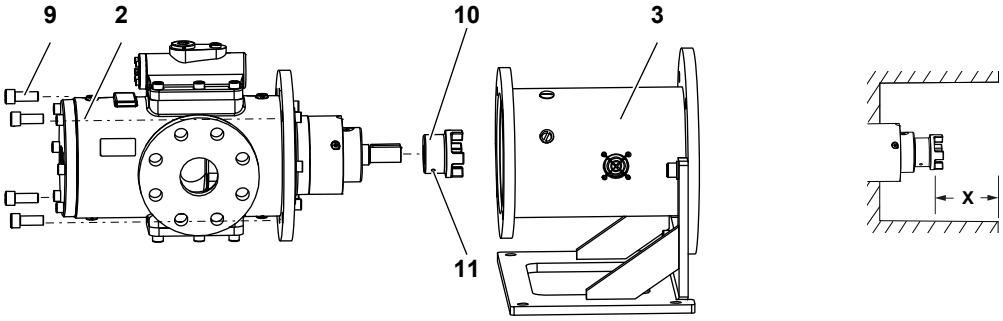

2. Ensure that the fixing screw **11** of the pump-side coupling half **10** is loosened.
3. Slide the pump-side coupling half onto the shaft until it stops and tighten the fixing screw.
4. Tighten the socket screws **9** between the pump **2** and pump bracket **3** with torque.
5. Measure and write down the distance **X** between the face of the coupling claws and the fitting surface of the pump bracket.

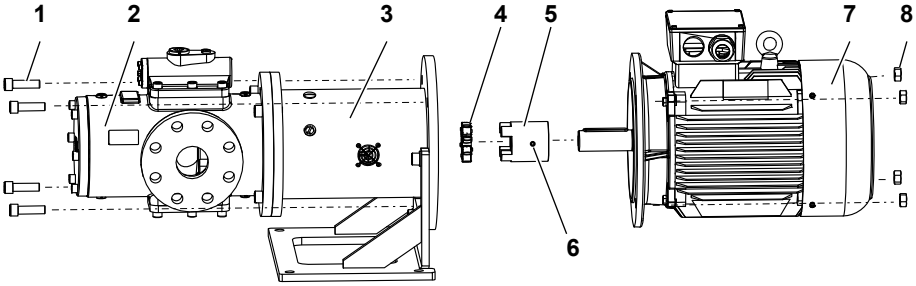

6. Ensure that the fixing screw **6** of the motor-side coupling half **5** is loosened.
7. Slide the motor-side coupling half onto the shaft end of the motor **7**.

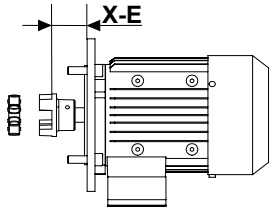

8. Check the distance between the face of the coupling teeth pump-side and the fitting surface of the motor flange. The distance has to be adjusted to the measured value **X** minus coupling distance **E**, see table of limit values for aligning the shaft coupling ↳ Connection, Page 20.
9. Tighten the fixing screw on the motor-side coupling half and insert the coupling intermediate ring **4**.
10. Secure the motor with eye bolts/hoisting equipment so that the motor can be pushed exactly horizontally into the pump bracket and the coupling halves interlock.
11. Tighten the socket screws **1** between the motor and pump bracket with torque.

12.5 Replacing the mechanical seal cartridge

Follow the manufacturer's instructions (e.g. Flowserve, John Crane, EagleBurgmann, etc.).

12.6 Replacing the mechanical seal (inner bearing)

12.6.1 Removing the mechanical seal

Personnel qualification:	☐ Fitter
Personal protective equipment:	☐ Work clothing ☐ Protective gloves ☐ Safety boots
Aids:	☐ Plastic hammer ☐ Extractor

Requirement:
✓ Coupling removed

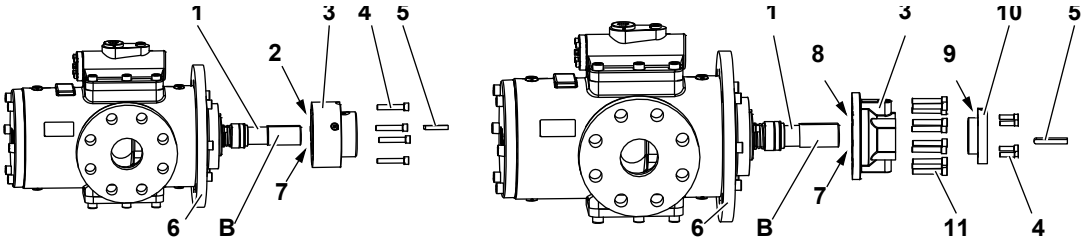

1. Remove the feather key **5** of the main screw **1**.
2. **Size 15 – 660, 880** (figure left):
   Remove the socket screws **4** of the seal housing **3** and take off the seal housing.
   -or-
   Size 851, 951 – 3550 (figure right):
   Remove the socket screws **4** of the seal flange **10** and take off the seal flange. Pull the O-ring **9** off the seal flange **10**. Remove the socket screws **11** of the seal housing **3** and take off the seal housing.
3. **Size 15 – 660, 880**: Remove the flat gasket **7** and carefully clean the fitting surface of the seal housing.
   -or-
   Size 851, 951 – 3550: Remove the flat gaskets **7** (2x) and carefully clean the fitting surface of the seal housing
4. **Attention:** Ensure that the adapter sleeve/threaded pin is not damaged.

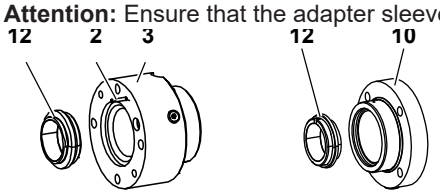

Mechanical seal standard/hard material:
Size 15 – 660, 880 (figure left)/**Size 851, 951 – 3550** (figure right):
Press the stationary seal ring **12** out of the seal housing/seal flange.
-or-

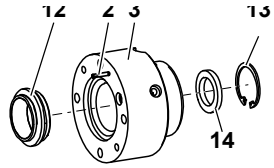

Mechanical seal with throttle ring:
Size 15 – 660, 880:
Remove the circlip **13** and throttle ring **14** from the seal housing and press the stationary seal ring **12** out of the seal housing.
-or-

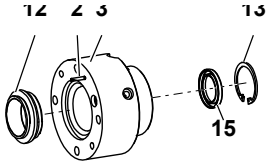

Mechanical seal with quench:
Size 15 – 660, 880:
Remove the circlip **13** and radial shaft seal ring **15** from the seal housing and press the stationary seal ring **12** out of the seal housing.

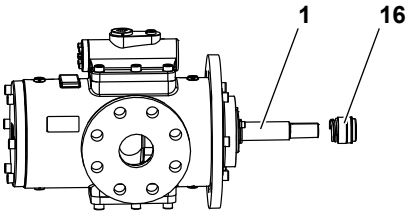

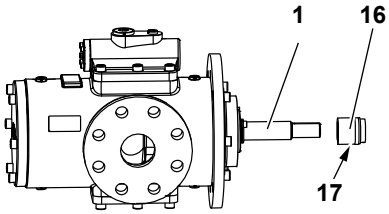

5. **Mechanical seal standard/with throttle ring/with quench:** (figure left):
Remove the rotary seal ring **16** from the main screw **1**.
-or-
Mechanical seal hard material (figure right):
Loosen the fixing screws **17** of the mechanical seal (quantity depends on size). Remove the rotary seal ring **16** from the main screw **1**.

12.6.2 Installing the mechanical seal

Personnel qualification:	☐ Fitter
Personal protective equipment:	☐ Work clothing ☐ Protective gloves ☐ Safety boots
Aids:	☐ Tool set mechanical seal or radial shaft seal ↳ Spare parts, Page 58 ☐ Silicone grease

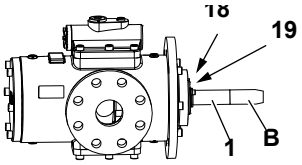

1. Ensure that all parts of the mechanical seal are dismantled so that the supporting ring **18** with circlip **19** is visible on the shaft of the main screw **1**.
2. Clean the main screw around the mechanical seal carefully and grease it, and push the mounting sleeve main screw **B** onto the main screw.

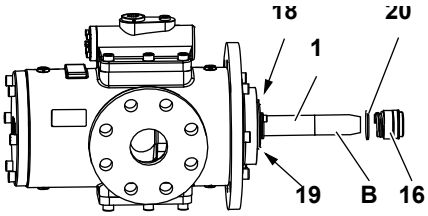

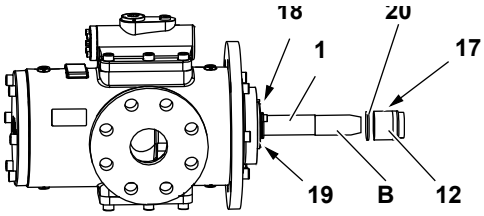

3. **Mechanical seal standard/with throttle ring/with quench** (figure left):
Press the supporting ring **20** and rotary seal ring **16**onto the main screw until it stops.
-or-
Mechanical seal hard material (figure right):
Loosen the fixing screws **17** of the mechanical seal (quantity depends on the size). Slide the supporting ring **20** and rotary seal ring onto the main screw until it stops and retighten the fixing screws.

4. **Attention:** When pressing the components into the seal housing/seal flange ensure that the adapter sleeve **21**/threaded pin **22** is not damaged. Take the recess into account.

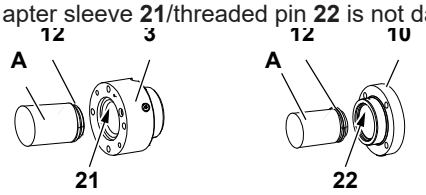

Mechanical seal standard/hard material
Size 15 – 660, 880 (figure left)/**Size 851, 951 – 3550** (figure right):
Use the mounting arbour stationary seal ring **A** to press the stationary seal ring **12** with mounted O-ring into the seal housing **3**/seal flange **10**.
-or-

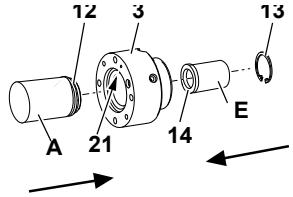

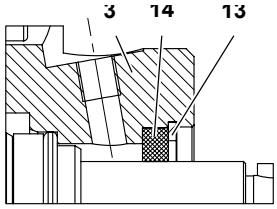

Mechanical seal with throttle ring
Size 15 – 660, 880:
Use the mounting arbour radial shaft seal ring **E** to press the throttle ring **14** into the seal housing **3** and insert the circlip **13**.
Use the mounting arbour stationary seal ring **A** to press the stationary seal ring **12** with mounted O-ring into the seal housing.
-or-

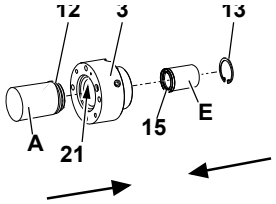

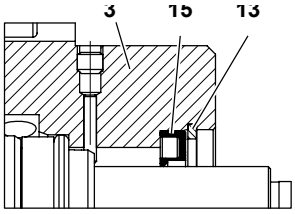

Mechanical seal with quench
Size 15 – 660, 880:
Use the mounting arbour radial shaft seal ring **E** to press the radial shaft seal ring **15** into the seal housing **3** and insert the circlip **13**.
Use the mounting arbour stationary seal ring **A** to press the stationary seal ring **12** with mounted O-ring into the seal housing.

5. Clean the sliding surfaces of the mechanical seal carefully and grease with silicone grease.

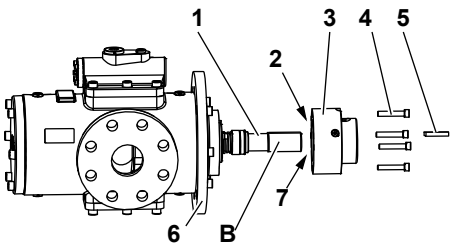

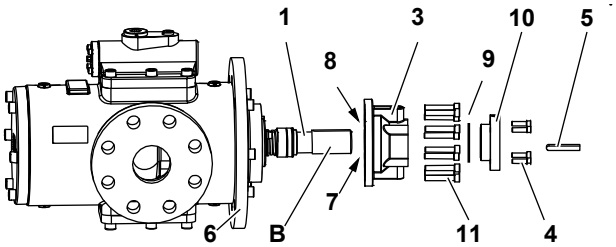

6. Position the flat gasket **7** at the seal housing.
7. **Attention:** Ensure that the spring ring **2**/straight pin **8** is not damaged during the mounting of the seal housing. Take the holes in the pump flange into account.
   Carefully slide the seal housing with flat gasket until the pump flange stops at the main screw.
8. **Size 15 – 660, 880:** Tighten the socket screws **4** between the seal housing and the pump with torque.
   -or-
   Size 851, 951 – 3550: Tighten the socket screws **11** between the seal housing and pump with torque.
9. Remove the mounting sleeve main screw **B**.

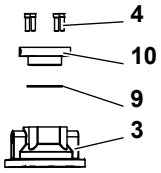

10. **Size 851, 951– 3550:** Slide the O-ring **9** onto the seal flange **10** and tighten the socket screws **4** between the seal flange and seal housing **3** with torque.
11. Mount the feather key **5**.

12.7 Replacing the radial shaft seal (inner bearing)

12.7.1 Removing the radial shaft seal

Personnel qualification:	☐ Fitter
Personal protective equipment:	☐ Work clothing ☐ Protective gloves ☐ Safety boots
Aids:	☐ Tool set, radial shaft seal ↳ Spare parts, Page 58

Requirement:
- ✓ Pump unit disconnected from the electrical power supply, deenergized and secured against being switched back on
- ✓ Coupling removed

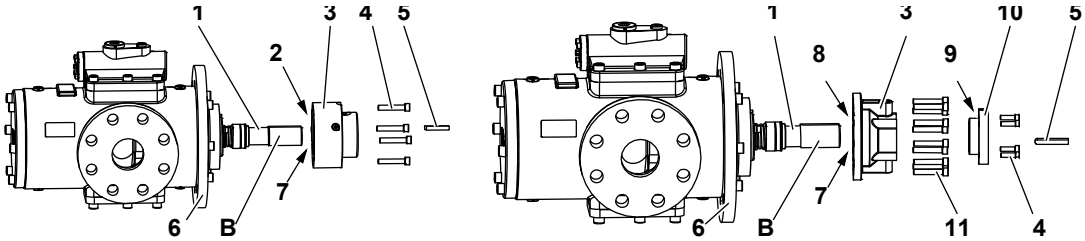

1. Remove the feather key **5** of the main screw **1**.
2. **Size 15 – 660, 880** (figure left):
   Remove the socket screws **4** of the seal housing **3** and take off the seal housing.
   -or-
   Size 851, 951 – 3550 (figure right):
   Remove the socket screws **4** of the seal flange **10** and take off the seal flange. Pull the O-ring **9** off the seal flange **10**. Remove the socket screws **11** of the seal housing **3** and take off the seal housing.

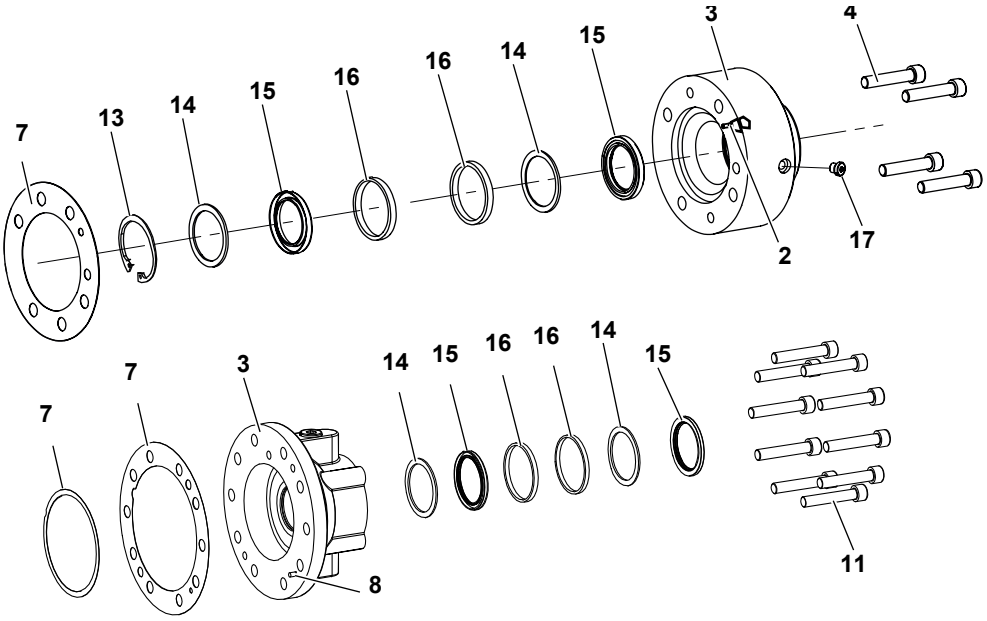

3. **Size 15 – 660, 880**: Remove the circlip **13**.
4. Press the radial shaft seal from the seal housing **3** with the mounting arbour radial shaft seal ring **E**. (The sequence of the components can deviate from the figure.)
5. **Size 15 – 660, 880**: Remove the flat gasket **7** and carefully clean the fitting surface of the seal housing.
   -or-
   Size 851, 951 – 3550: Remove the flat gaskets **7** (2x) and carefully clean the fitting surface of the seal housing.

12.7.2 Installing the radial shaft seal

Personnel qualification:	☐ Fitter
Personal protective equipment:	☐ Work clothing ☐ Protective gloves ☐ Safety boots
Aids:	☐ Tool set, radial shaft seal ↳ Spare parts, Page 58 ☐ Thread sealant (for example Loctite 572) ☐ Molybdenum disulphide paste (for example Fenkart T4)

Note The thread sealant serves during installation of the radial shaft seal as a lubricant, and after it has cured as an anti-rotation measure.

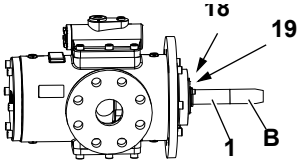

1. Ensure that all parts of the radial shaft seal are dismantled so that the supporting ring **18** with circlip **19** are visible on the shaft of the main screw **1**.
2. Clean the main screw around the mechanical seal carefully and grease it, and push the mounting sleeve main screw **B** onto the main screw.
3. Carefully clean the fitting surface of the radial shaft seal in the seal housing **3**.
4. Apply thread sealant (for example Loctite 572). Ensure that no thread sealant comes into contact with the sealing lip.

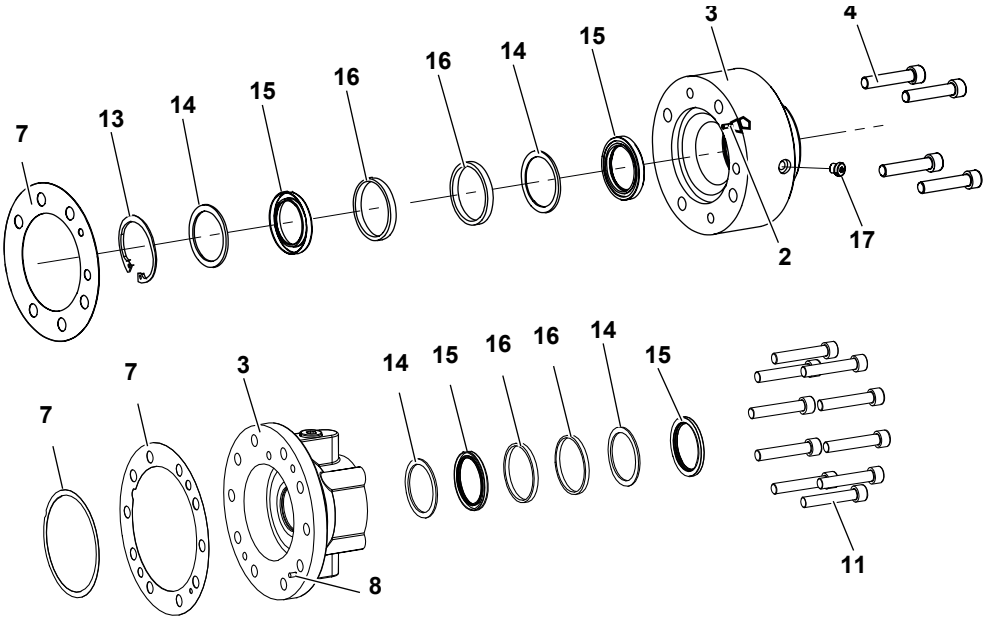

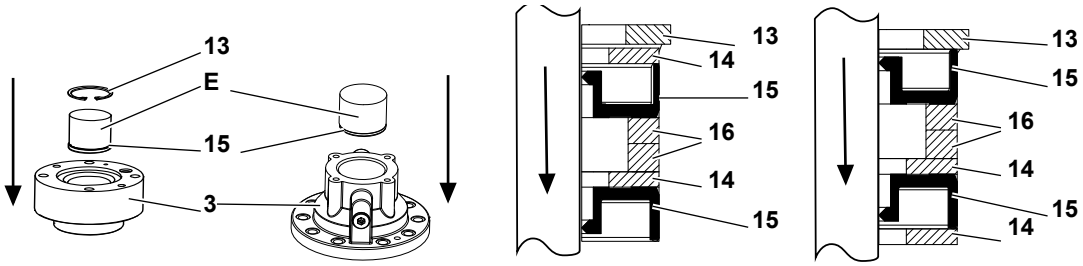

5. Ensure that the mounting arbour radial shaft seal ring **E** contacts the support of the radial shaft seal ring completely and that there are no sharp edges in the area of the sealing lip.
6. **Attention:** Take the mounting direction of both radial shaft seal rings **15** into account. Supporting rings **14** of the radial shaft seal can be positioned differently.
   Use the mounting arbour to carefully press the components of the radial shaft seal into the seal housing in accordance with the sectional view (radial shaft seal ring **15** (2x), supporting ring **14** (2x), distance ring **16** (2x)). In the case of excessive resistance apply additional thread sealant.
7. Remove the mounting arbour **E**.
8. **Size 15 – 660, 880:** Mount the circlip **13**.
9. Fill the intermediate space of the radial shaft seal rings with the corresponding grease.

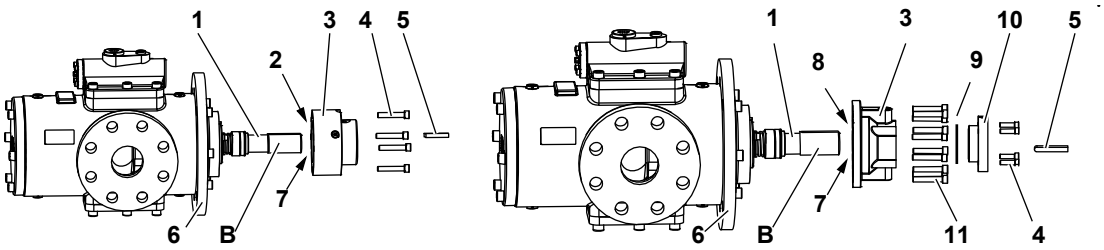

10. **Size 15 – 660, 880:** Position the flat gasket **7** on the seal housing.
    -or-
    Size 851, 951 – 3550: Position the flat gaskets 7 (2x) on the seal housing.
11. **Attention:** Ensure that the adapter sleeve **2**/straight pin **8** is not damaged while mounting the seal housing. Take the recess into account.
    Slide the seal housing **3** onto the main screw until it stops.
12. **Size 15 – 660, 880** (figure left): Tighten the socket screws **4** between the seal housing and the pump with torque.
    -or-
    Size 851, 951 – 3550 (figure right): Tighten the socket screws **11** between the seal housing and pump with torque.
13. Remove the mounting sleeve main screw **B**.
14. **Size 851, 951 – 3550** (figure right): Push the O-ring **9** onto the seal flange **10**.
15. **Size 851, 951 – 3550** (figure right): Push the seal flange **10** into the seal housing **3** and tighten with socket screws **4** using torque.
16. Mount the feather key **5**.

12.8 Replacing the ball bearing and screw set (inner bearing)

12.8.1 Removing the ball bearing and screw set

Personnel qualification:	☐ Fitter
Personal protective equipment:	☐ Work clothing ☐ Protective gloves ☐ Safety boots
Aids:	☐ Plastic hammer ☐ Extractor

Requirement:
✓ Cartridge pump removed
✓ Shaft seal removed

12.8 Replacing the ball bearing and screw set (inner bearing)

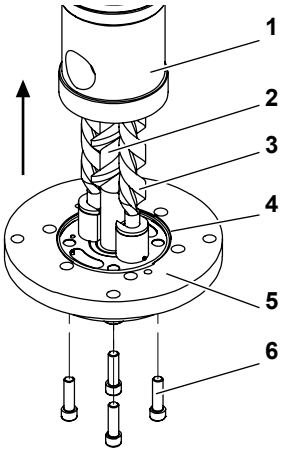

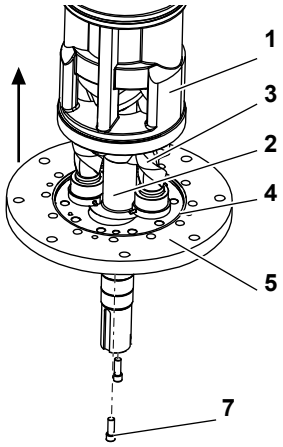

1. Clamp the pump at the main screw. Ensure that the shaft is not damaged in the process.
2. **Size 15 – 660, 880** (figure left): Remove the socket screws **6** at the flange cover **5**.
   Size 851, 951 – 3550 (figure right): Remove the socket screws **7** at the flange cover **5**.
3. Lift the cartridge housing **1** of the flange cover. Hold the idle screws **3** in the process.
4. Remove the idle screws.

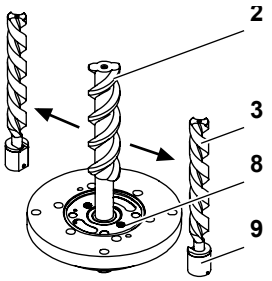

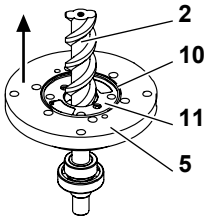

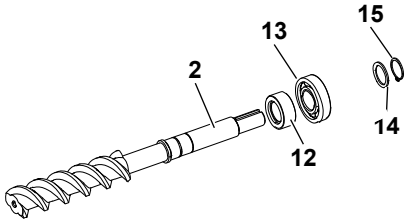

5. Take the bearing bush set **9**, consisting of bearing bush and segment washer (segment washer only at **Size 15 – 660, 880**), off the idle screws and keep it for mounting.
6. **Size 15 – 660, 880, 2250 – 3550:** Remove the edge sealing rings **8** from the flange cover.
7. Remove the flat gasket **11** at the flange cover.
8. Remove the O-ring **10** from the flange cover and lift the flange cover from the main screw.
9. Unclamp the main screw **2**, rotate it by 180° and clamp again.
10. Remove the circlip **15** and supporting ring **14**.
11. Use an extractor to pull the ball bearing **13** off the main screw.
12. **Size 15 – 660, 880:** Pull off the balancing cylinder **12**.

12.8.2 Installing the ball bearing and screw set

Personnel qualification:	☐ Fitter
Personal protective equipment:	☐ Work clothing ☐ Protective gloves ☐ Safety boots
Aids:	☐ Mounting sleeve ball bearing

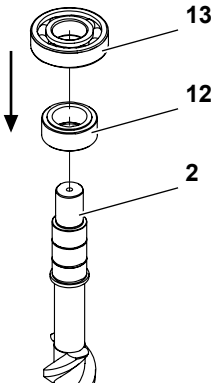

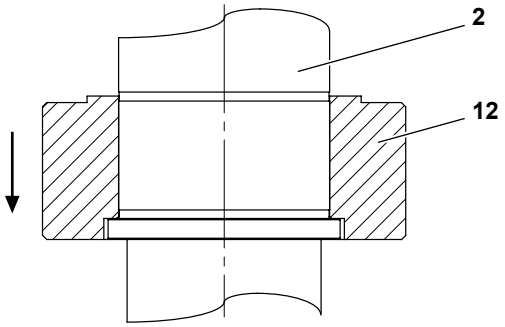

1. **Size 15 – 660, 880:** Press the balancing cylinder **12** onto the shaft of the main screw **2**.
2. Press on the ball bearing **13**.

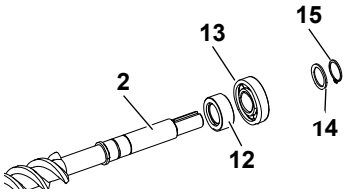

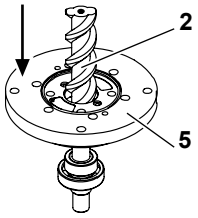

3. Slide the supporting ring **14** onto the main screw and mount the circlip **15**.
4. Unclamp the main screw, rotate it by 180° and clamp again.
5. Mount the flange cover **5** onto the main screw.

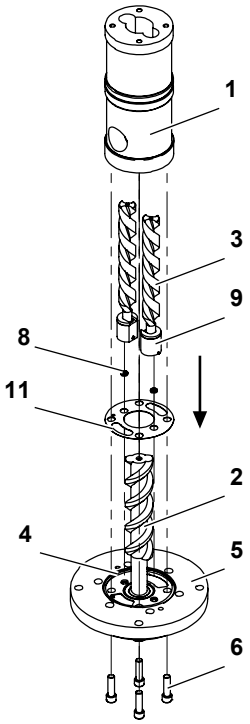

6. Clean the fitting surfaces carefully, position the flat gasket **11** in the flange cover.
7. **Size 15 – 660, 880, 2250 – 3550:** Position the edge sealing rings **8** in the flange cover. Take the recesses for the edge sealing rings into account.
8. Mount the bearing bush set **9**, consisting of the bearing bush and segment washer (segment washer only for **Size 15 – 660, 880**), on the shafts of the idle screws **3**.

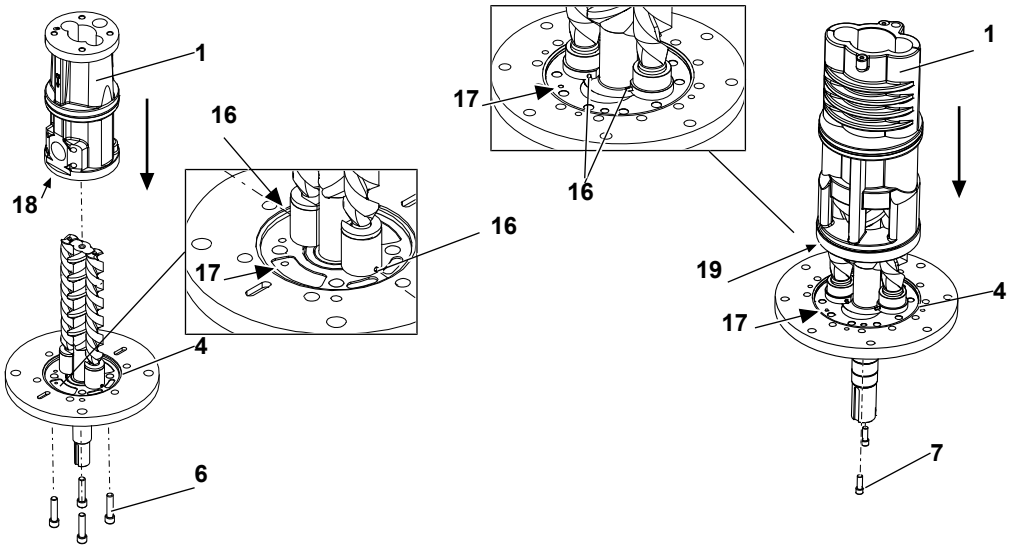

9. Place the idle screws left and right of the main screw so that the fitting surfaces of the bearing bushes contact the shaft of the main screw. Observe the alignment of the positioning pins **16**.
10. **Attention:** Ensure that the adapter sleeve **18**/straight pin **19** is not damaged when mounting the cartridge housing. Take the hole **17** into account.
    Slide the cartridge housing **1** over the pre-mounted idle screws and main screw.
11. **Size 15 – 660, 880** (figure left): Tighten the socket screws **6** with torque.
    Size 2250– 3550 (figure right): Tighten the socket screws **7** with torque.
12. Mount and lightly grease the O-ring **4** in the flange cover.

12.9 Replacing the mechanical seal and ball bearing (outer bearing)

12.9.1 Removing the mechanical seal and ball bearing

Personnel qualification:	☐ Fitter
Personal protective equipment:	☐ Work clothing ☐ Protective gloves ☐ Safety boots
Aids:	☐ Tool set, mechanical seal ↳ Spare parts, Page 58 ☐ Extractor

Requirement:
- ✓ Pump unit disconnected from the electrical power supply, deenergized and secured against being switched back on
- ✓ Coupling removed

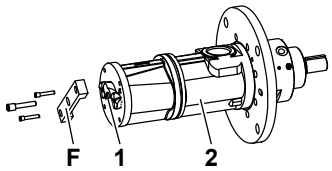

1. Secure the position of the main screw **1** in the pump housing **2**. To do so, mount the main screw stop for the outer bearing **F** to the pump housing.

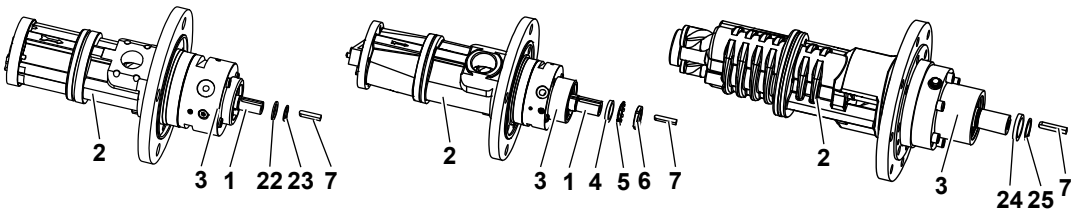

2. Remove the feather key **7** from the main screw **1**.

3. **Size 32 – 42:** Remove the circlip **23** and supporting ring **22** from the main screw.
   -or-
   Size 160 – 660, 880: Remove the groove nut **6**, locking plate **5** and distance ring **4** from the main screw.
   -or-
   Size 851, 951 – 3550: Remove the circlip **25** and distance sleeve **24** from the main screw.

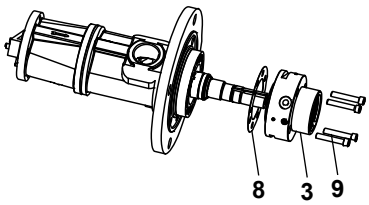

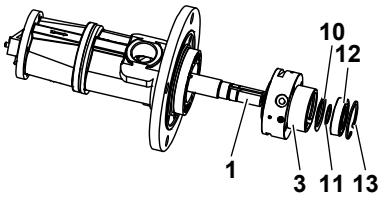

4. Remove the socket screws **9** and seal housing **3** with the extractor from the pump flange.
5. **Size 32 – 42**: Remove the O-ring.
   -or-
   Size 55 – 118, 160 – 660, 880, 851, 951 – 3550:
   Remove the flat gasket **8** and carefully clean the fitting surface of the seal housing.
6. Remove the circlip **13**, pull the ball bearing **12** with the extractor from the seal housing **3** and remove the supporting ring **11**.
7. **Size 370 – 450**: Remove the seal (Nilos ring) **10**.
8. **Attention:** Ensure that the adapter sleeve/threaded pin is not damaged.

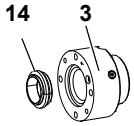

Mechanical seal standard/hard material:
Size 32 – 42, 55 – 118, 160 – 660, 880, 851, 951 – 3550:
Push the stationary seal ring **14** from the seal housing.
-or-

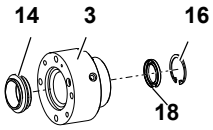

Mechanical seal with quench:
Size 32 – 42, 55 – 118, 160 – 660, 880:
Remove the circlip **16**, radial shaft seal ring **18** from the seal housing and press the stationary seal ring **14** from the seal housing.

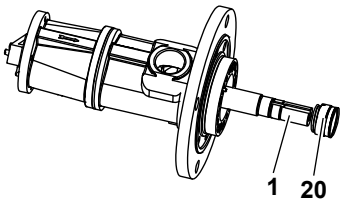

9. **Mechanical seal standard/with quench:**
   Remove the rotary seal ring **20** from the main screw.
   -or-
   Mechanical seal of hard material (without figure):
   Loosen the fixing screw of the mechanical seal (quantity depends on size) and remove the rotary seal ring from the main screw.

12.9.2 Installing the mechanical seal and ball bearing

Personnel qualification:	☐ Fitter
Personal protective equipment:	☐ Work clothing ☐ Protective gloves ☐ Safety boots
Aids:	☐ Tool set, mechanical seal ↳ Spare parts, Page 58 ☐ Silicone grease

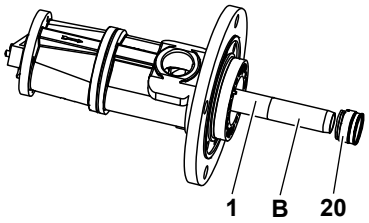

1. Clean the main screw **1** carefully in the area of the mechanical seal and grease it.
2. Slide the mounting sleeve main screw **B** onto the main screw.
3. **Mechanical seal standard/with quench**:
   Slide the rotary seal ring **20** onto the main screw until it stops.
   -or-
   Mechanical seal hard material:
   Loosen the fixing screws of the mechanical seal (quantity depends on size). Slide the rotary seal ring onto the main screw until it stops and retighten the fixing screws.
4. **Attention:** When pressing the components into the seal housing ensure that the adapter sleeve **21** is not damaged. Take the recess into account.

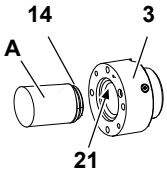

Mechanical seal standard/hard material:
Size 32 – 42, 55 – 118, 160 – 660, 880, 851, 951 – 3550:
Use the mounting arbour stationary seal ring **A** to press the stationary seal ring **14** with mounted O-ring into the seal housing **3**.
-or-

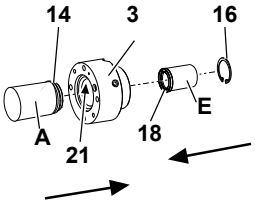

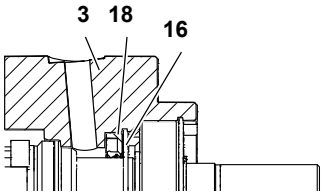

Mechanical seal with quench:
Size 32 – 42, 55 – 118, 160 – 660, 880:
Use the mounting arbour radial shaft seal ring **E** to press the radial shaft seal ring **18** into the seal housing **3** and mount the circlip **16**.
Use the mounting arbour stationary seal ring **A** to press the stationary seal ring **14** with mounted O-ring into the seal housing.

5. Clean the sliding surfaces of the mechanical seal carefully and grease with silicone grease.

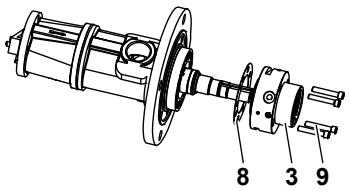

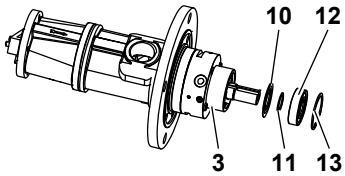

6. **Size 32 – 42**: Insert the O-ring into the seal housing.
   -or-
   Size 55 – 118, 160 – 660, 880, 851, 951 – 3550: Position the flat gasket **8** at the seal housing **3**.

7. **Attention:** Ensure that the spring ring is not damaged while mounting the seal housing. Take the holes in the pump flange into account.
   Carefully slide the seal housing with flat gasket until the pump flange stops at the main screw.
8. Remove the mounting sleeve main screw **B**.
9. Tighten the socket screws **9** between the seal housing and pump with torque.
10. **Size 370 – 450**: Insert the seal **10** (Nilos ring).
11. Insert the supporting ring **11** and press the ball bearing **12** with mounting sleeve ball bearing **C** into the seal housing and mount the circlip **13**.

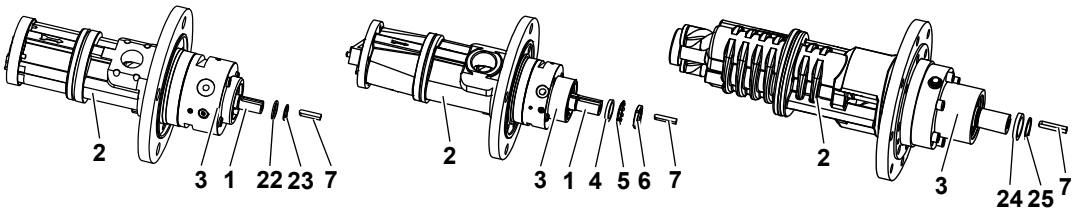

12. **Size 32 – 42, 55 – 118:** Mount the supporting ring **22** and circlip **23** onto the main screw.
    -or-
    Size 160 – 880: Mount the distance ring **4**, locking plate **5**, groove nut **6** onto the main screw.
    -or-
    Size 851, 951 – 3550: Mount the distance sleeve **24** and circlip **25** onto the main screw.
13. Mount the feather key **7**.

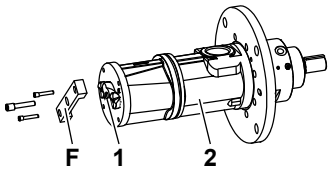

14. Remove the main screw stop for the outer bearing **F** from the pump housing.

12.10 Replacing the screw set (outer bearing)

12.10.1 Removing the screw set

Personnel qualification:	☐ Fitter
Personal protective equipment:	☐ Work clothing ☐ Protective gloves ☐ Safety boots
Aids:	☐ Plastic hammer ☐ Extractor

Requirement:
✓ Cartridge pump removed
✓ Shaft seal removed

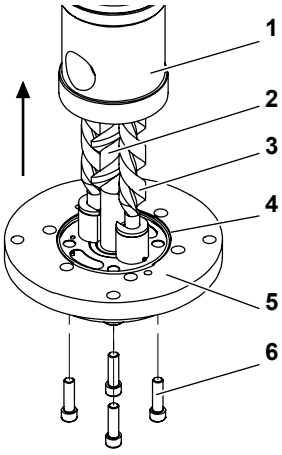

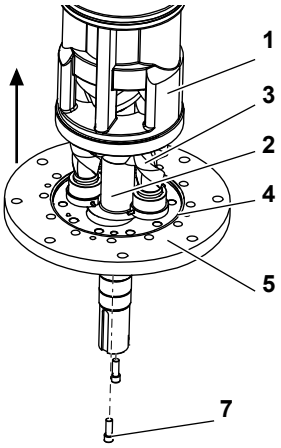

1. Clamp the pump at the main screw **2**. Ensure that the shaft is not damaged in the process.
2. **Size 32 – 42, 55 – 660, 880** (figure left): Remove the socket screws **6** at the flange cover **5**.
   Size 2250 – 3550 (figure right): Remove the socket screws **7** at the flange cover **5**.
3. Lift the cartridge housing **1** of the flange cover. Hold the idle screws **3** in the process.
4. Remove the idle screws.

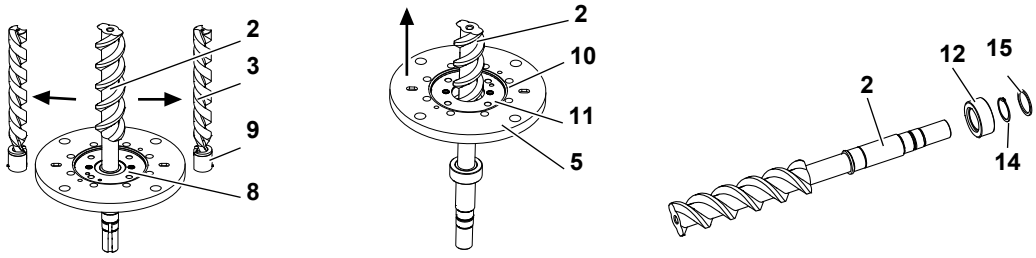

5. Take the bearing bush set **9**, consisting of the bearing bush and segment washer (segment washer only at **Size 32 – 42, 55 – 660, 880**), off the idle screws and keep it for mounting.
6. **Size 32 – 42, 55 – 660, 880, 2250 – 3550:** Remove the edge sealing rings **8** from the flange cover.
7. Remove the flat gasket **11** at the flange cover.
8. Remove the O-ring **10** from the flange cover and lift the flange cover from the main screw.
9. Unclamp the main screw **2**, rotate it by 180° and clamp again.
10. **Size 32 – 42, 55 – 118, 160 – 660, 880:**
    Remove the supporting ring **14** and circlip **15** from the main screw. Pull the balancing cylinder **12** from the main screw.

12.10.2 Installing the screw set

Personnel qualification:	☐ Fitter
Personal protective equipment:	☐ Work clothing ☐ Protective gloves ☐ Safety boots
Aids:	☐ Mounting sleeve ball bearing

Requirement:
✓ Cartridge pump removed
✓ Ball bearing removed
✓ Shaft seal removed

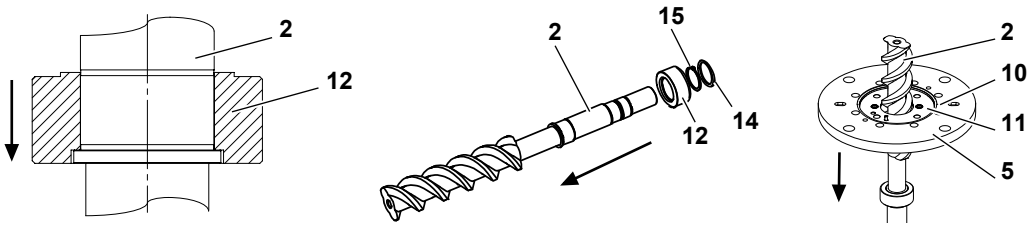

1. **Size 32 – 42, 55 – 118, 160 – 660, 880:**
   Press the balancing cylinder **12** onto the shaft of the main screw **2**. Slide the circlip ring **15** and supporting ring **14** onto the main screw.
2. Unclamp the main screw, rotate it by 180° and clamp again.
3. Mount the flange cover **5** onto the main screw.

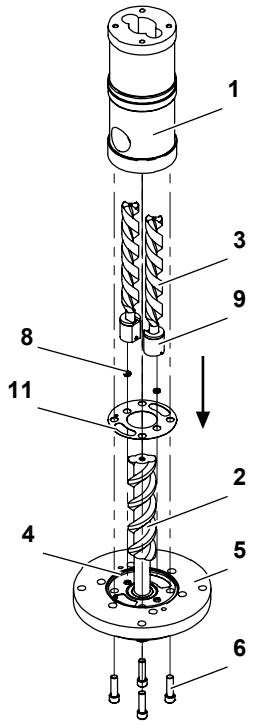

4. Clean the fitting surfaces carefully, position the flat gasket **11** in the flange cover.
5. **Size 32 – 42, 55 – 660, 880, 2250 – 3550:** Position the edge sealing rings **8** in the flange cover. Take the recesses for the edge sealing rings into account.
6. Mount the bearing bush set **9**, consisting of the bearing bush and segment washer (segment washer only for **Size 32 – 42, 55 – 660, 880**), on the shafts of the idle screws **3**.

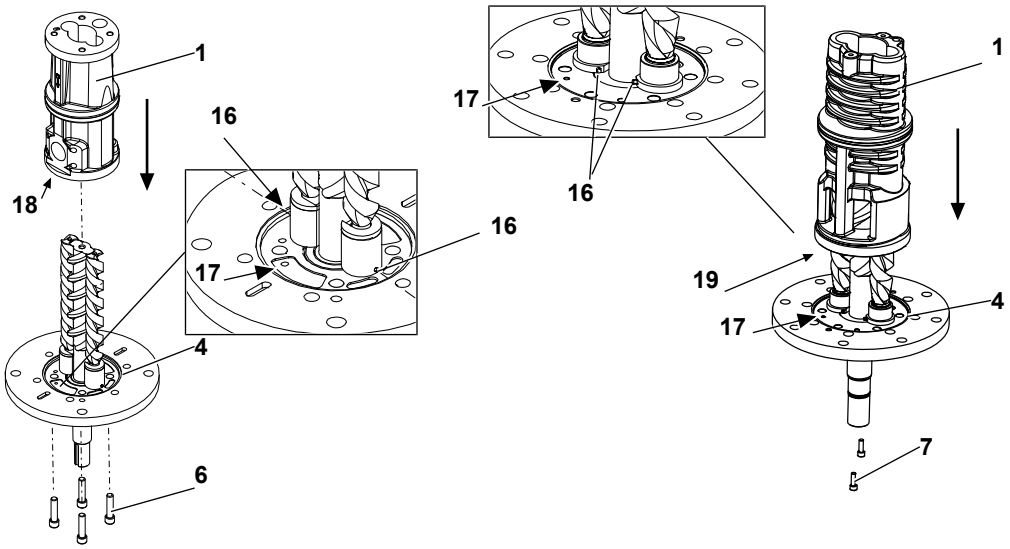

7. Place the idle screws left and right of the main screw so that the fitting surfaces of the bearing bushes contact the shaft of the main screw. Observe the alignment of the positioning pins **16**.
8. **Attention:** Ensure that the adapter sleeve **18**/straight pin **19** is not damaged when mounting the cartridge housing. Take the hole **17** into account.
   Slide the cartridge housing **1** over the pre-mounted idle screws and main screw.
9. **Size 32 – 42, 55 – 660, 880:** Tighten the socket screws **6** with torque.
   Size 851, 2250 – 3550: Tighten the socket screws **7** with torque.
10. Mount and lightly grease the O-ring **4** in the flange cover.

12.11 Replacing the cartridge pump

12.11.1 Removing the cartridge pump

Personnel qualification:	☐ Fitter
Personal protective equipment:	☐ Work clothing ☐ Protective gloves ☐ Safety boots
Aids:	☐ Mounting lever ☐ Hoisting equipment

⚠ WARNING

Risk of injury and damage to equipment through falling and toppling parts.

- ▶ Use intact and correctly dimensioned hoisting equipment in accordance with the total weight to be transported.
- ▶ Select the lift points for the hoisting equipment in accordance with the centre of gravity and the weight distribution.
- ▶ Use at least two load ropes.
- ▶ Do not stand under raised loads.

Requirement:
✓ Suction connection and pressure connection protected against soiling through protective cover
✓ Coupling removed

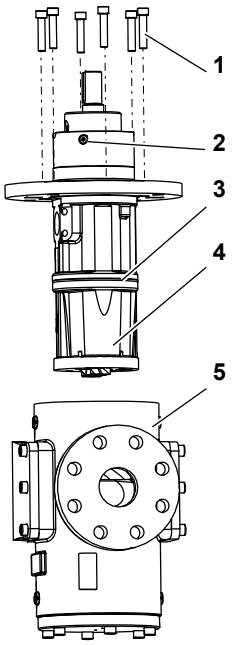

1. ▶ Position the pump with eye bolts/hoisting equipment so that the vertical set up on the end cover is secured against falling over.
2. ▶ Also secure the outer housing **5** against falling over.
3. ▶ Mark the position of the vent hole **2** on the outer housing for subsequent installation of the cartridge pump.
4. ▶ Remove the socket screws **1**, and use forcing screws to detach the cartridge housing **4** from the outer housing.
5. ▶ Remove cartridge pump exactly vertically from the outer housing.

12.11.2 Installing the cartridge pump

Personnel qualification:	☐ Fitter
Personal protective equipment:	☐ Work clothing ☐ Protective gloves ☐ Safety boots
Aids:	☐ Mounting lever ☐ Hoisting equipment

⚠ WARNING

Risk of injury and damage to equipment through falling and toppling parts.

- ► Use intact and correctly dimensioned hoisting equipment in accordance with the total weight to be transported.
- ► Select the lift points for the hoisting equipment in accordance with the centre of gravity and the weight distribution.
- ► Use at least two load ropes.
- ► Do not stand under raised loads.

ATTENTION

Sealing damage due to incorrect alignment of the cartridge housing.

If the air cannot flow out of the sealing chamber, the seal will be damaged or destroyed.

- ► For horizontal installation, align the vent hole upwards.
- ► When assembling with a pump bracket, ensure that the vent hole remains accessible.

Requirement:

✓ Suction connection and pressure connection protected against soiling through protective cover
✓ Coupling removed

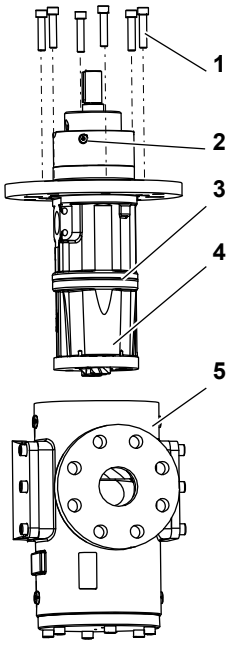

1. ► Carefully clean the fitting surfaces of the cartridge housing **4** and the outer housing **5**.
2. ► Set up the outer housing vertically and secure it against falling over.
3. ► Position the cartridge housing with eye bolts/hoisting equipment vertically over the outer housing. Note the marking for the vent hole **2** applied during removal.
4. ► Lightly grease the O-ring **3**.
5. ► Slide the cartridge pump exactly vertically into the outer housing. In the process ensure that no seals are damaged.
6. ► Tighten the socket screws **1** with torque.

13 Disposal

13.1 Dismantling and disposing of the pump

Personnel qualification:	☐ Fitter
Personal protective equipment:	☐ Work clothing ☐ Face protection ☐ Protective gloves ☐ Safety boots
Aids:	☐ Solvents or industrial cleaners suitable for the pumped liquid ☐ Collection tank

⚠ WARNING

Danger of poisoning and environmental damage through residues.

- ▶ Wear personal protective equipment during all the work. Ensure face protection.
- ▶ Before disposal collect any pumped or test liquid still present safely and dispose of it in an environmentally compatible manner in accordance with the applicable local regulations.
- ▶ Before disposing neutralize the residues.

Requirement:

- ✓ Disconnect the pump unit from the power supply and secure it against being switched back on
- ✓ Pump unit cooled down to the ambient temperature and disconnected from the pipe system
- ✓ Pump emptied completely
- ✓ Pump placed at a location suitable for dismantling

1. ▶ Dismantle the pump and disassemble it into its individual parts.
2. ▶ Clean residues of the pumped liquid from the individual parts.
3. ▶ Separate sealing elements made of elastomers and ceramics (SiC) from the pump and dispose of them in separately.
4. ▶ Recycle iron parts.

14 Troubleshooting

14.1 Possible faults

Faults can have different causes. The following tables list the symptoms of a fault, the possible causes and measures for troubleshooting.

Identification	Fault
1	No pump suction
2	Delivery rate too low
3	Pump too loud
4	Motor overload
5	Uneven delivery rate
6	Pump has seized
7	Shaft seal leaks

14.2 Troubleshooting

Fault identification							Cause	Remedy
1	–	–	–	–	–	–	Pump suction line closed	
								⟶ Check the shut-off devices. If required, open.
1	2	3	–	5	–	–	Parts soiled (filter, suction line, suction valve, strainer)	
								⟶ Clean parts.
1	2	3	–	5	–	–	Suction head too high	
								⟶ Reduce the level difference. -or- Reduce the line length. -or- Increase the line cross-section. -or- Heat up the pumped liquid. -or- Install a filter / strainer with a larger mesh width. Ensure that the permissible mesh width is not exceeded.
1	–	3	–	–	–	–	Level in the intake container too low	
								⟶ Fill the intake container.
1	–	–	–	–	–	–	Too little pumped liquid in the pump	
								⟶ Fill the pump with pumped liquid.
1	–	–	–	–	–	–	Incorrect pump direction of rotation	
								⟶ Swop the two electrical connection phases ↳ Connection, Page 20.
–	–	–	4	–	–	–	Differential pressure too high	
								⟶ Reduce the differential pressure.
1	–	3	4	5	–	–	Viscosity of the pumped liquid too high	
								⟶ Increase the temperature of the pumped liquid. -or- Decrease the speed.
–	2	–	–	–	–	–	Viscosity of the pumped liquid too low	
								⟶ Reduce the temperature of the pumped liquid. -or- Increase the speed.
–	2	3	–	5	–	–	Airlock/gas in the pumped liquid	
								1. ⟶ Test the pipe system for air admission, replace leaking parts. 2. ⟶ Reduce the suction head. -or- Increase the inlet pressure.
–	2	–	4	–	–	–	Speed/frequency/voltage of the motor false	
								1. ⟶ Ensure that the motor frequency and voltage match the operating voltage. 2. ⟶ Ensure that the speed of the motor matches the rating plate of the pump. If necessary adjust the speed.
–	2	3	–	5	–	–	Overflow valve opens during normal operation	
								⟶ Set the opening pressure to 110% of the differential pressure ↳ During operation, Page 27.
–	2	–	–	5	–	–	Overflow valve leaks	
								⟶ Contact the manufacturer.
–	2	–	–	–	–	–	Advanced wear of the housing/screw set	
								⟶ Contact the manufacturer.

Fault identification							Cause	Remedy
–	–	–	–	–	–	7	Advanced wear of sealing surfaces	
								Replace the seal and check the pumped liquid for abrasive substances. If required, replace the filter/strainer. -or- Contact the manufacturer.
–	–	3	–	–	–	–	Coupling aligned incorrectly	
								Assemble the coupling and motor correctly ↳ Connection, Page 20
–	–	3	–	–	–	–	Pump subject to mechanical stress	
								Connect the pump correctly to the pipe system ↳ Connection, Page 20.
–	–	3	–	–	–	–	Vibrations/pulsations in the system	
								Bear the pump unit elastically. -or- Make the connections with hoses.
–	–	3	–	–	–	–	Flow speed in the pressure line or suction line too high	
								Set the flow speed in the pressure line so that it does not exceed 3 m/s. -or- Set the flow speed in the suction line so that it does not exceed 1 m/s. -or- Contact the manufacturer.
–	–	3	4	–	–	7	Ball bearing damaged	
								Replace the ball bearing ↳ Servicing, Page 31.
–	2	3	4	–	–	7	Superficial damage to pump parts coming into contact with the liquid	
								Contact the manufacturer.
–	–	–	–	–	–	7	Shaft seal damaged through dry running	
								Replace the shaft seal ↳ Servicing, Page 31.
–	–	–	–	–	–	7	Inlet pressure too high	
								1. Reduce the inlet pressure at the system side. 2. Replace the shaft seal ↳ Servicing, Page 31.
–	–	–	–	–	–	7	Inlet pressure too low	
								Install a non-return valve at the pressure side.
–	–	–	–	–	–	7	Shaft seal is overloaded through thermal/chemical influences	
								1. Check the maximum operating temperature. 2. Check the suitability and resistance of the elastomers with regard to the pumped liquid. -or- Contact the manufacturer.
–	–	–	–	–	–	7	Overload of the shaft seal by pressure build-up during the heating process	
								Open the pressure-side/suction-side shut-off device in order to avoid a pressure build-up through heat expansion of the pumped liquid.
1	2	3	4	5	–	–	Cold start when delivering high-viscosity liquids	
								Install the heating system.
–	–	–	4	–	–	7	Foreign bodies in the pump	
								Contact the manufacturer.
–	–	3	–	–	6	–	Differential pressure is too high and has overloaded the idle screws	
								Contact the manufacturer.
–	–	3	–	–	6	–	Viscosity is too low and has overloaded the idle screws	
								Contact the manufacturer.
1	2	3	4	–	–	7	Pump damaged through dry running	
								Contact the manufacturer.
1	–	–	–	–	–	–	Pump does not vent	
								Vent the pressure line at the highest point.

Tab. 11: Fault table

15 Accessories

15.1 Heating

15.1.1 Possible types of heating

The pump can optionally be equipped with a heating system. The manufacturer recommends a heating system at high-viscosity pumped liquids that do not flow sufficiently if not heated. A flowability that lies too low can result in excessive power draw or to cavitation or sealing problems.

Possible types of heating:

- ☐ Fluid heating system

15.1.2 Fluid heating system

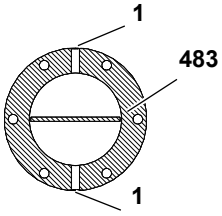

483 Heating cover

1 Pipe connection

Fig. 17: Fluid heating system

The fluid heating system consists of a heating cover **483**, attached additionally to the end cover, through which a heating liquid (for example vapour, thermal oil) flows.

Scope of delivery:

1 heating cover
8 socket screws

Tab. 12: Scope of delivery of the fluid heating system

Operating data

Parameter	Unit	Value
Max. pressure	[bar]	18
Max. liquid temperature	[°C]	220

Tab. 13: Operating data fluid heating system

Dimensions and steam amount

The following table shows the dimensions of the connections of the fluid heating system, depending on the outer housing as well as the required steam amount for a temperature increase of 50 °C in a heating-up period of 1 h.

Pump with outer housing GJS

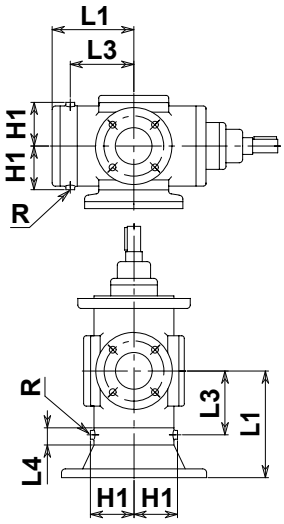

Size	Dimensions [mm]						Steam amount [kg/h]
	L1	L2	L3	L4	H1	R	
15 – 26	192	161	119	50	57	R 1/4"	1
32 – 42	205	195	145	45	67	R 1/4"	2
55 – 85	234	216	166	45	80	R 1/4"	2
105 – 118	250	245	190	45	94	R 1/4"	3
160 – 210	275	280	225	45	104	R 1/4"	3
235 – 275	410	308	237	60	112	R 3/8"	4
370 – 450	410	331	265	60	124	R 3/8"	4
550 – 880	410	381	315	60	136	R 3/8"	5
851 – 951	435	412	335	65	148	R 3/8"	5
1101 – 1301	515	461	401	65	155	R 3/8"	7
1501 – 1701	531	495	432	65	173	R 3/8"	8
2250	–	–	–	–	–	–	–
2850 – 3550	–	–	–	–	–	–	–

Tab. 14: Dimensions and steam amount – outer housing GJS

Pump with outer housing steel

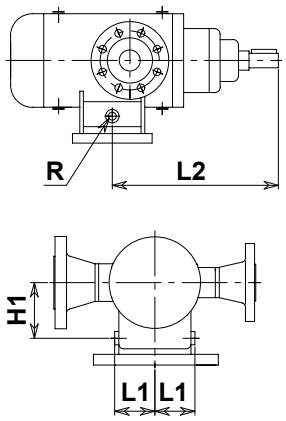

Size	Dimensions [mm]				Steam amount [kg/h]
	L1	L2	H1	R	
15 – 26	60	230	75	R 1/4"	1
32 – 42	60	230	75	R 1/4"	2
55 – 85	60	275	90	R 1/4"	2
105 – 118	70	315	120	R 1/2"	3
160 – 210	70	350	104	R 1/2"	3
235 – 275	70	395	130	R 1/2"	4
370 – 450	90	440	135	R 1/2"	4
550 – 880	90	490	175	R 1/2"	5
851 – 951	100	550	155	R 3/4"	5
1101 – 1301	120	560	165	R 3/4"	7
1501 – 1701	120	589	194	R 3/4"	8
2250	–	–	–	–	–
2850 – 3550	–	–	–	–	–

Tab. 15: Dimensions and steam amount – outer housing steel

Installing the fluid heating system

Personnel qualification:	☐ Fitter
Personal protective equipment:	☐ Work clothing ☐ Protective gloves ☐ Safety boots

Requirement:
- ✓ Pump unit disconnected from the electrical power supply, deenergized and secured against being switched back on
- ✓ Shut-off devices closed
- ✓ Pump unit cooled down to the ambient temperature
- ✓ Pump emptied

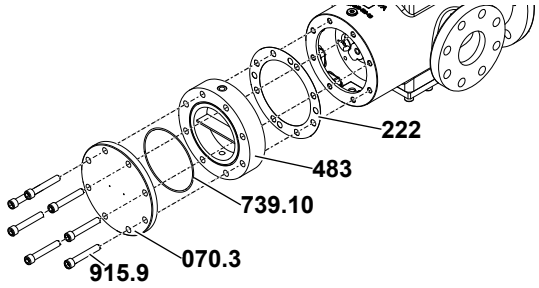

1. Remove the socket screws **915.9** on the end cover **070.3** of the pump.
2. Remove the flat gasket **222** and carefully clean the fitting surfaces at the outer housing and end cover.
3. Lightly grease the O-ring **739.10** and insert it into the heating cover **483**.
4. Bond the new flat gasket onto the fitting surface of the outer housing.
5. Mount the heating cover with O-ring and end cover.
6. Tighten the socket screws **915.9** with torque.

Commissioning the fluid heating system

⚠ DANGER

Risk of injury through discharging pumped liquid.

The pump housing may burst through heat expansion of the pumped liquid.

► Open all the valves during the heating process.

1. Take the required heating-up periods into account ↳ Accessories, Page 53.
2. When setting the pressure and temperature of the heating fluid take the permissible operating limits of the pump into account ↳ Technical data, Page 8.

15.2 Overflow valve

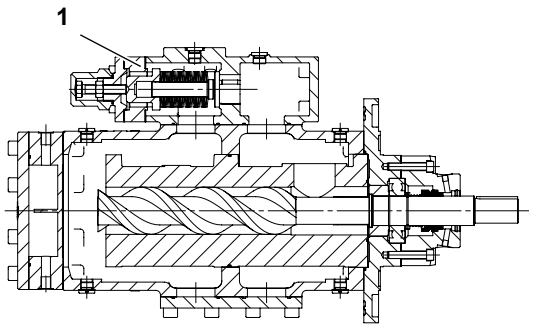

The installed overflow valve **1** (optional) ensures that very high pressures that could cause housing parts to burst do not arise.

The overflow valve is purely there as a safety element of the pump and should not be used for control or regulation purposes such as maintaining pressure. If the valve is kept open for too long under adverse operating conditions (high differential pressures and/or low viscosities) it will only take a few seconds for the overflow valve to become damaged. As a result, the overflow valve will leak permanently and there will be a corresponding reduction in the delivery rate. In addition to this, circulation through the overflow valve for too long results in excess heating of the pump. This reduces viscosity and can ultimately lead to pump failure.

It therefore has to be ensured through a safety valve at the system that the maximum allowable working pressure always lies under the opening pressure of the overflow valve.

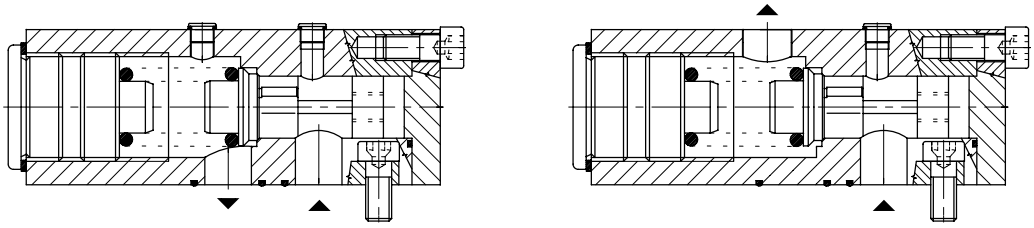

The overflow valve is offered as a circulation valve (figure left) or as a return valve (figure right).

Note
- ☐ A function test of the overflow valve at least every 5 years is essential for the safe operation ↳ During operation, Page 27.
- ☐ Scope and if necessary shorter test intervals must be specified by the operator-owner in accordance with the requirements and national provisions (for example Austrian Ordinance of Safety and Health (BetrSichV)).
- ☐ The first function test must take place directly after the commissioning.
- ☐ After longer downtimes (> 4 weeks) the function of the overflow valve must be tested again.

15.2.1 Adjusting the overflow valve

Personnel qualification:	☐ Fitter
Aids:	☐ Allen key

Note The opening pressure of the overflow valve is set at the factory to at least 1 bar or 110 % of the differential pressure.

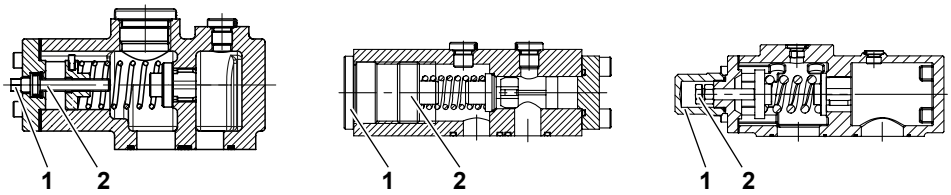

Fig. 18: Overflow valve

1 Screw plug/cap
2 Adjusting screw

⚠ WARNING

Risk of injury through emitted pumped liquid.

Pumped liquids can be hot, poisonous, combustible and caustic.

- ▶ Wear personal protective clothing during all the work. Ensure face protection.
- ▶ Collect any discharging pumped liquid safely and dispose of it in an environmentally compatible manner in accordance with the applicable local regulations.

Requirement:
✓ Pressure-side pressure gauge installed

1. ▶ Switch on the pump and remove the screw plug/cap **1** of the overflow valve.
2. ▶ Increase the supply pressure step-by-step to check the opening pressure of the overflow valve. Keep an eye on the pressure gauge and make sure that the operating limits are observed.
   ⇨ The opening pressure is reached, when the displayed pressure falls.
3. ▶ Turn the adjusting screw **2** to set the opening pressure:
   Turning clockwise: Increase the opening pressure
   Turning counter-clockwise: Reduce the opening pressure
4. ▶ Repeat Steps 2 and 3 until the desired opening pressure is reached.
5. ▶ Tighten the screw plug/cap **1** again.

15.2.2 Test the overflow valve

Personnel qualification:	☐ Trained personnel
Personal protective equipment:	☐ Work clothing ☐ Face protection ☐ Protective gloves ☐ Safety boots

⚠ WARNING

Risk of injury through emitted pumped liquid.

Pumped liquids can be hot, poisonous, combustible and caustic.

- ► Wear personal protective clothing during all the work. Ensure face protection.
- ► Collect any discharging pumped liquid safely and dispose of it in an environmentally compatible manner in accordance with the applicable local regulations.

Requirement:

✓ Function test necessary ↳ Maintenance, Page 29

✓ Pressure-side pressure gauge installed

1. ▶ Switch on the pump unit.
2. ▶ Gradually increase the delivery pressure downstream of the pump using a valve/ball valve etc. Keep an eye on the pressure gauge and make sure that the operating limits are observed.
   - ⇨ The response pressure of the overflow valve is reached as soon as the displayed pressure drops briefly.
   - ⇨ Flow noises change.
   - ⇨ Overflow valve opens and closes at short intervals.
3. ▶ Close the valve/ball valve downstream of the pump completely.
   - ⇨ 100% of the delivery volume now circulates via the overflow valve.
4. ▶ Keep an eye on the pressure gauge and make sure that the operating limits are observed.
5. ▶ Maintain the operating state for a maximum of 30 s.
6. ▶ Open the valve/ball valve completely again after the pump.
7. ▶ Switch off the pump unit.

16 Spare parts

16.1 Overview of CLE 15 – 660, CLE 880 (inner bearing)

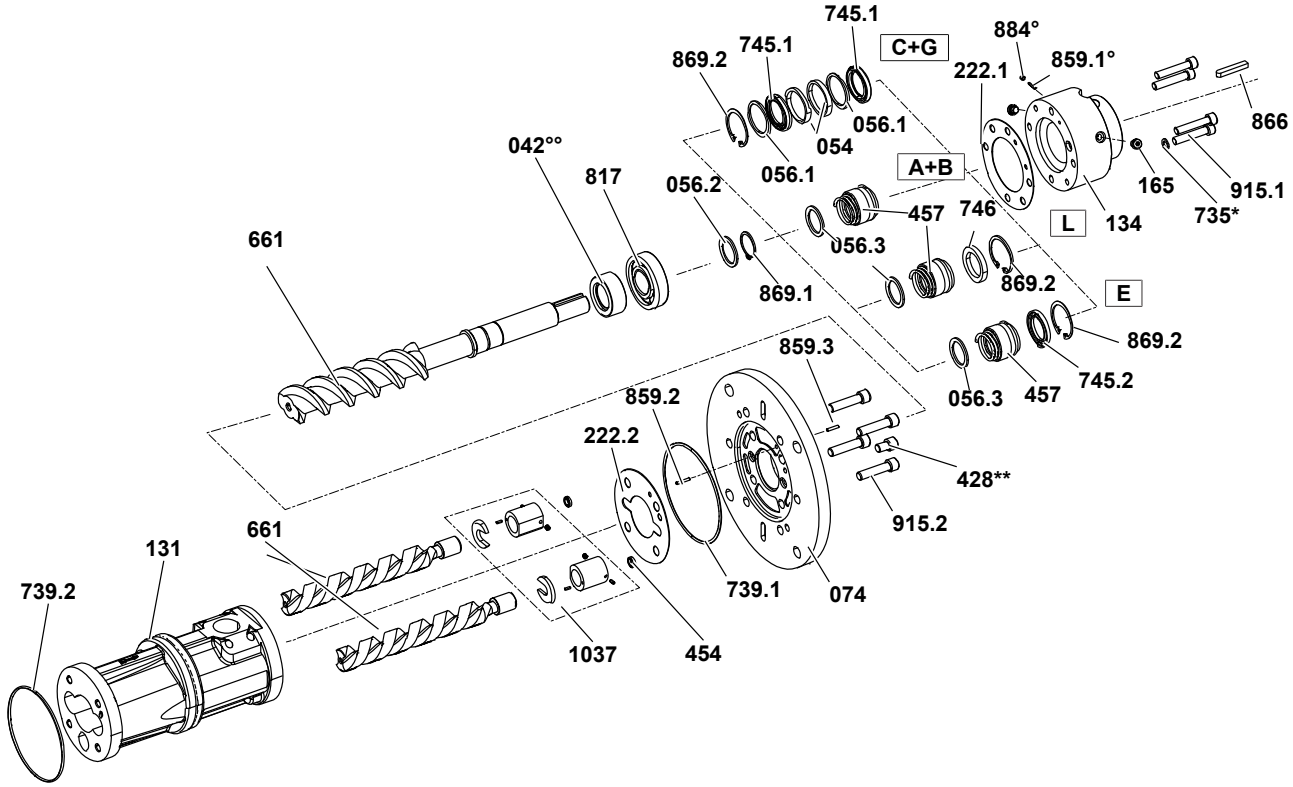

Fig. 19: Spare parts CLE 15 – 660, CLE 880

A+B	Mechanical seal standard/hard material	**E**	Mechanical seal with quench
C+G	Radial shaft seal standard/high-temperature	**L**	Mechanical seal with throttle ring

Qty.	Item No.	Part	Qty.	Item No.	Part
1	**042**	Balancing cylinder	1	**739.1**	O-ring
2	**054**	Distance ring	1	**739.2**	O-ring
2	**056.1**	Supporting ring	2	**745.1**	Radial shaft seal ring
1	**056.2**	Supporting ring	1	**745.2**	Radial shaft seal ring
1	**056.3**	Supporting ring	1	**746**	Throttle ring
1	**074**	Flange cover	1	**817**	Ball bearing
1	**131**	Cartridge housing	1	**859.1°**	Adapter sleeve
1	**134**	Place the seal housing	1	**859.2**	Adapter sleeve
2	**165**	Screw plug	1	**859.3**	Adapter sleeve
1	**222.1**	Flat gasket	1	**866**	Feather key
1	**222.2**	Flat gasket	1	**869.1**	Circlip
1	**428****	Counter-pressure valve	1	**869.2**	Circlip
2	**454**	Edge sealing ring	1	**884°**	Threaded pin
1	**457**	Mechanical seal	4	**915.1**	Socket screw
1	**661**	Screw set	4	**915.2*****	Socket screw
4	**735***	Copper seal	1	**1037**	Bearing bush set
	*	Only for size 15 – 26			
	**	Only pumps with inlet pressure under the ambient pressure			
	***	Only for Size 55 – 660, 880			
	°	Only for mechanical seal			
	°°	Only for Size 32 – 660, 880			

Tab. 16: Spare parts CLE 15 – 660, CLE 880

16.2 Overview of CLE 851, CLE 951 – 3550 (inner bearing)

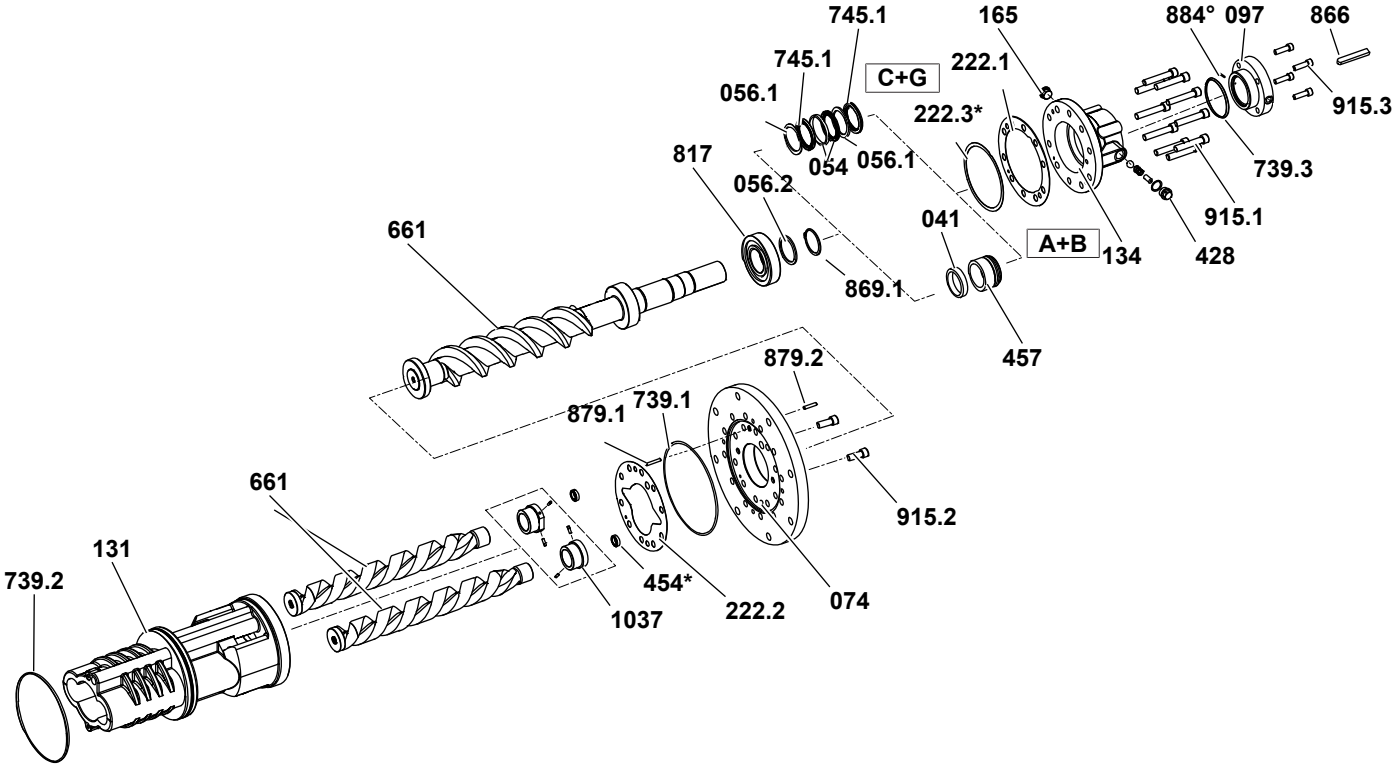

Fig. 20: Spare parts CLE 851, CLE 951 – 3550

A+B	Mechanical seal standard/hard material
C+G	Radial shaft seal standard/high-temperature

Qty.	Item no.	Part	Qty.	Item no.	Part
1	**041**	Spacer sleeve	1	**661**	Screw set
2	**054**	Spacer ring	1	**739.1**	O-ring
2	**056.1**	Supporting ring	1	**739.2**	O-ring
1	**056.2**	Supporting ring	1	**739.3**	O-ring
1	**074**	Flange cover	2	**745.1**	Radial shaft seal ring
1	**097**	Seal flange	1	**817**	Ball bearing
1	**131**	Cartridge housing	1	**866**	Feather key
1	**134**	Seal housing	1	**869.1**	Circlip
1	**165**	Screw plug	1	**879.1**	Straight pin
1	**222.1**	Flat gasket	1	**879.2**	Straight pin
1	**222.2**	Flat gasket	1	**884°**	Threaded pin
1	**222.3***	Flat gasket	6/8/10	**915.1**	Socket screw
1	**428****	Counter-pressure valve	2	**915.2**	Socket screw
2	**454***	Edge sealing ring	4	**915.3**	Socket screw
1	**457**	Mechanical seal	1	**1037**	Bearing bush set
	*	For size 2250 – 3550 only			
	**	Only for pumps with inlet pressure under the ambient pressure			
	°	Only for mechanical seal			

Tab. 17: Spare parts CLE 851, CLE 951 – 3550

16.3 Overview of CLE 32 – 42, 55 – 660, CLE 880 (outer bearing)

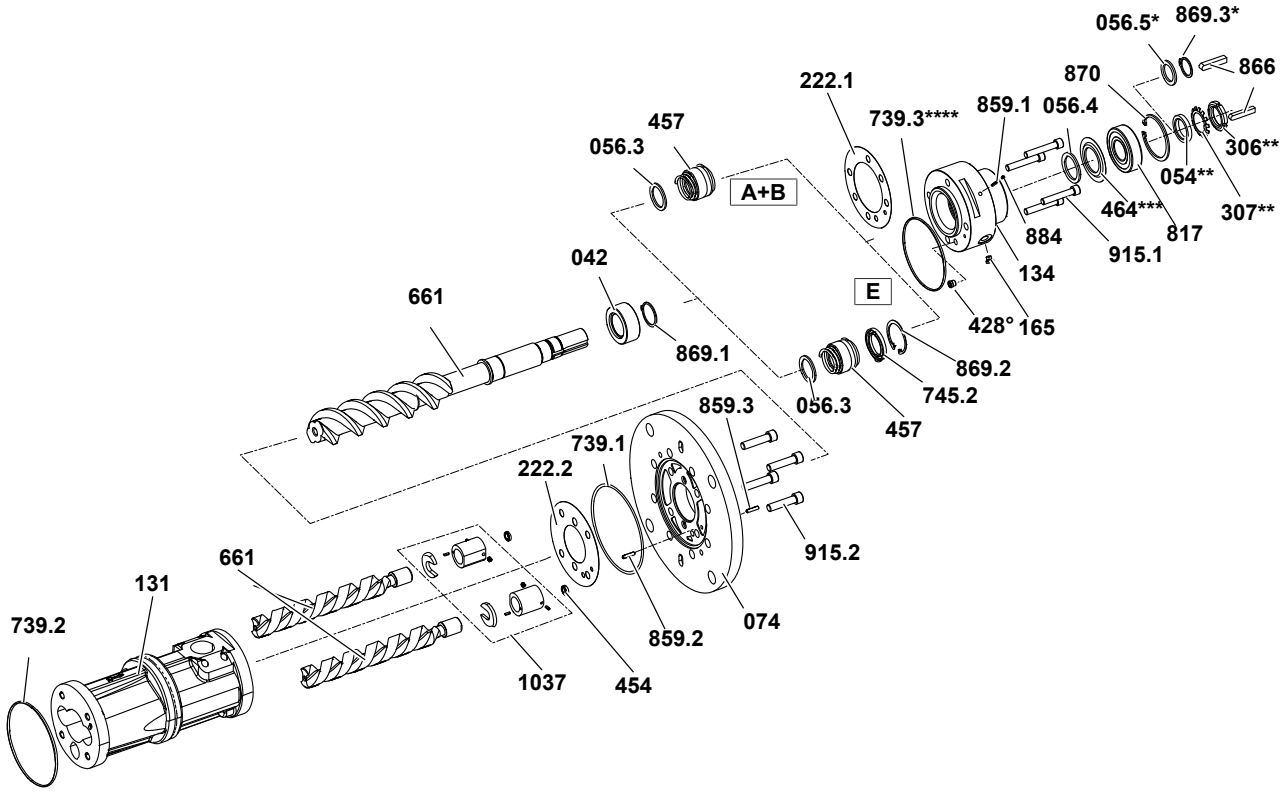

Fig. 21: Spare parts CLE 32-42, 55-660, CLE 880

A+B Mechanical seal standard/hard material

E Mechanical seal with quench

Qty.	Item No.	Part	Qty.	Item No.	Part
1	**042**	Balancing cylinder	1	**739.1**	O-ring
1	**054****	Distance ring	1	**739.2**	O-ring
1	**056.4**	Supporting ring	1	**739.3******	O-ring
1	**056.5***	Supporting ring	1	**745.2**	Radial shaft seal ring
1	**074**	Flange cover	1	**817**	Ball bearing
1	**131**	Cartridge housing	1	**859.1**	Adapter sleeve
1	**134**	Place the seal housing	1	**859.2**	Adapter sleeve
2	**165**	Screw plug	1	**859.3**	Adapter sleeve
1	**222.1**	Flat gasket	1	**866**	Feather key
1	**222.2**	Flat gasket	1	**869.1**	Circlip
1	**306****	Groove nut	1	**869.2**	Circlip
1	**307****	Locking plate	1	**869.3***	Circlip
1	**428°**	Counter-pressure valve	1	**870**	Circlip
2	**454**	Edge sealing ring	1	**884**	Threaded pin
1	**457**	Mechanical seal	4	**915.1**	Socket screw
1	**464*****	Seal (Nilos ring)	4	**915.2**	Socket screw
1	**661**	Screw set	1	**1037**	Bearing bush set
	*	Only for Size 32 – 42, 55 – 118			
	**	Only for Size 160 – 660, 880			
	***	Only for size 370 – 450			
	****	Only for size 32 – 42			
	°	Only pumps with inlet pressure under the ambient pressure			

Tab. 18: Spare parts CLE 32 – 42, 55 – 660, CLE 880

16.4 Overview of CLE 851, CLE 951 – 3550 (outer bearing)

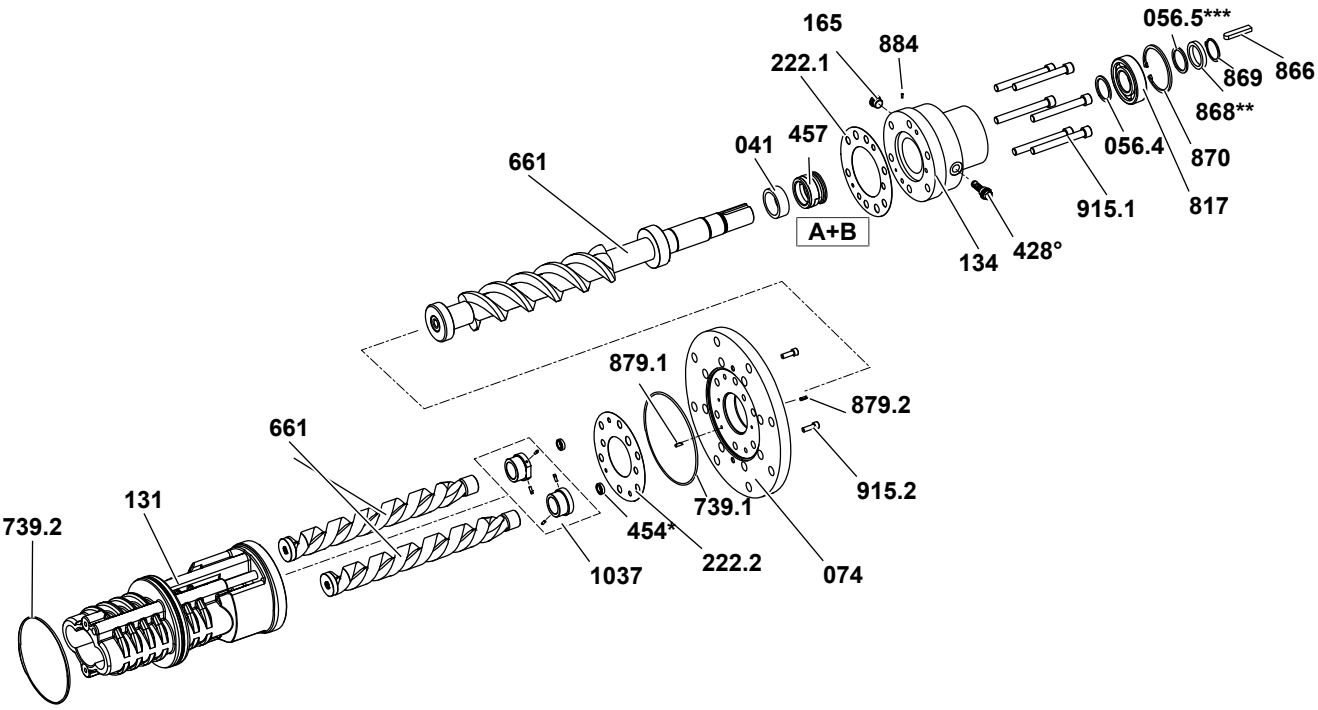

Fig. 22: Spare parts CLE 851, CLE 951-3550

A+B Mechanical seal standard/hard material

Qty.	Item no.	Part	Qty.	Item no.	Part
1	**041**	Distance sleeve	1	**739.1**	O-ring
1	**056.4**	Supporting ring	1	**739.2**	O-ring
1	**056.5*** **	Supporting ring	1	**817**	Ball bearing
1	**074**	Flange cover	1	**866**	Feather key
1	**131**	Cartridge housing	1	**868****	Support ring
1	**134**	Seal housing	1	**869**	Circlip
1	**165**	Screw plug	1	**870**	Circlip
1	**222.1**	Flat gasket	1	**879.1**	Straight pin
1	**222.2**	Flat gasket	1	**879.2**	Straight pin
1	**222.3***	Flat gasket	1	**884**	Threaded pin
1	**428°**	Counter-pressure valve	6/8/10	**915.1**	Socket screw
2	**454***	Edge sealing ring	2	**915.2**	Socket screw
1	**457**	Mechanical seal	1	**1037**	Bearing bush set
1	**661**	Screw set			
	*	For size 2250 – 3550 only			
	**	For size 851, 951 – 1301 only			
	***	For size 1501 – 3550 only			
	°	Only pumps with inlet pressure under the ambient pressure			

Tab. 19: Spare parts CLE 851, CLE 951 – 3550

16.5 Overview of outer housing GJS CGF/CGH/CGV

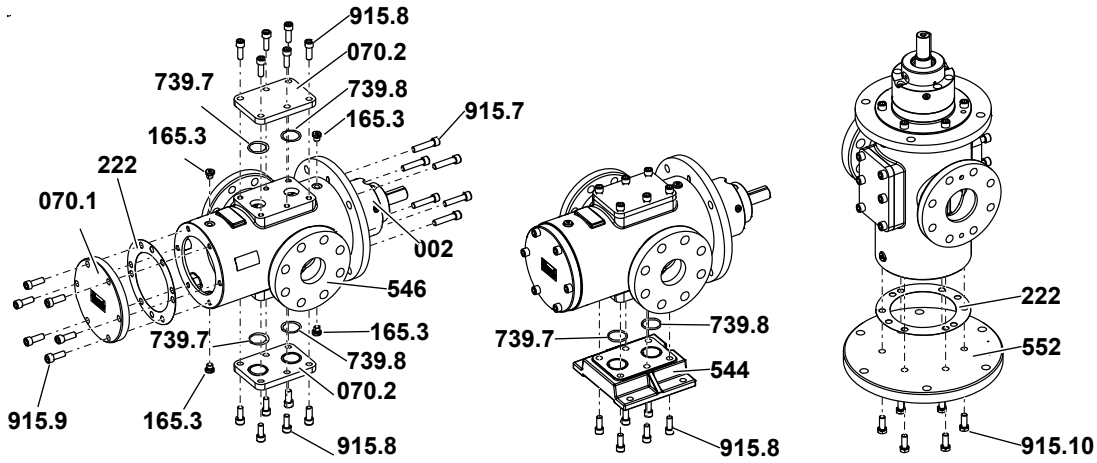

Fig. 23: Spare parts outer housing GJS – principle diagram

Qty.	Item No.	Part	Qty.	Item No.	Part
1	**002**	Cartridge pump	1	**552**	Pump socket
1	**070.1**	End cover	2	**739.7**	O-ring
2	**070.2**	End cover	2	**739.8**	O-ring
4	**165.3**	Screw plug	4/6/8	**915.7**	Socket screw
1	**222**	Flat gasket	8/12/16	**915.8**	Socket screw
1	**544**	Pump foot	6	**915.9**	Socket screw
1	**546**	Outer housing	4/6/8	**915.10**	Socket screw

Tab. 20: Spare parts outer housing GJS

16.6 Overview of outer housing steel CGF/CGH/CGV

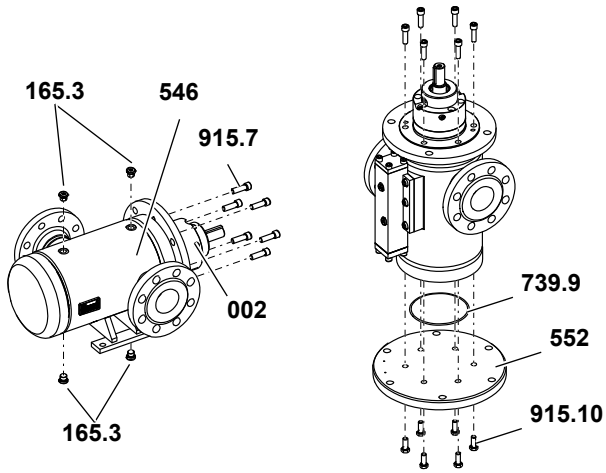

Fig. 24: Spare parts outer housing steel – principle diagram

Qty.	Item No.	Part	Qty.	Item No.	Part
1	**002**	Cartridge pump	1	**739.9**	O-ring
4	**165.3**	Screw plug	4/6/8	**915.7**	Socket screw
1	**552**	Pump socket	4/6/8	**915.10**	Socket screw
1	**546**	Outer housing			

Tab. 21: Spare parts outer housing steel

16.7 Overview of accessories CGF/CGH/CGV

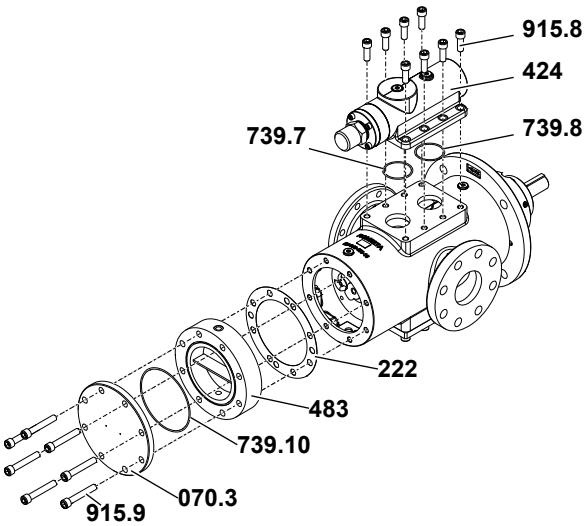

Fig. 25: Spare parts accessories – principle diagram

Qty.	Item No.	Part	Qty.	Item No.	Part
1	**070.3**	End cover	1	**739.8**	O-ring
1	**222**	Flat gasket	1	**739.10**	O-ring
1	**424**	Overflow valve	4/6/8	**915.8**	Socket screw
1	**483**	Fluid heating system	4/6/8	**915.9**	Socket screw
1	**739.7**	O-ring			

Tab. 22: Spare parts accessories

16.8 Tool sets

16.8.1 Mechanical seal tool set K

		Qty.	Part
A	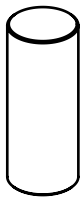	1	Mounting arbour stationary seal ring
B	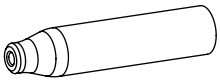	1	Main screw mounting sleeve
C	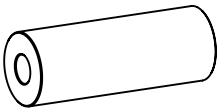	1	Mounting sleeve ball bearing
D	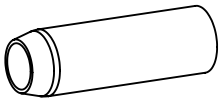	1	Pump flange mounting sleeve Only for size 851 – 2900

16.8.2 Radial shaft seal tool set K

		Qty.	Part
E	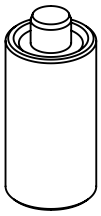	1	Mounting arbour radial shaft seal ring
B	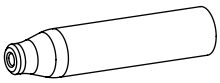	1	Main screw mounting sleeve
C	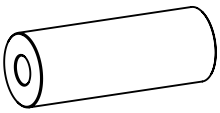	1	Mounting sleeve ball bearing

17 Appendix

17.1 Tightening torques for screws with metric screw threads with and without wedge lock washers

Note In the case of galvanised screw plugs and screw plugs made of stainless steel the inner thread and outer thread have to be greased thorough before mounting in order to prevent threads from seizing.

Note The manufacturer recommends tightening screws with wedge lock washers according to the table three times after another with the same tightening torque

Tightening torque [Nm]							
Screws with head contact surface							Countersunk screws
					Stainless steel screws A2 and A4		
Thread	5.6	8.8	10.9	8.8+ Alu*	Property class 70	Property class 80	8.8
M 3	0.6	1.5	–	1.5	1.1	1.3	1.0
M 4	1.4	3.0	4.1	3.0	2.0	2.3	2.0
M 5	2.7	6.0	8.0	6.0	3.9	4.7	5.0
M 6	4.7	10.3	14.0	10.3	6.9	8.0	9.0
M 8	11.3	25.0	34.0	25.0	17.0	22.0	14.0
M 10	23.0	47.0	68.0	47.0	33.0	43.0	36.0
M 12	39.0	84.0	117	84.0	56.0	75.0	60.0
M 14	62.0	133	186	133	89.0	–	90.0
M 16	96.0	204	285	204	136	180	100
M 18	133	284	390	284	191	–	–
M 20	187	399	558	399	267	370	135
M 24	322	687	960	687	460	605	360

Tab. 23: Tightening torques metric screw thread

*When screwing into aluminium, the tightening torque reduces by 20 % when the screw-in depth is less than double the thread diameter.

17.2 Tightening torques for screw plugs with thread measured in inches and elastomer seal

Note In the case of galvanised screw plugs and screw plugs made of stainless steel the inner thread and outer thread have to be greased thorough before mounting in order to prevent threads from seizing.

Tightening torque [Nm]	
Thread	**Galvanized + stainless steel**
G 1/8"	13.0
G 1/4"	30.0
G 3/8"	60.0
G 1/2"	80.0
G 3/4"	120
G 1"	200
G 1 1/4"	400
G 1 1/2"	450

Tab. 24: Tightening torques with thread measured in inches

17.3 Contents of the Declaration of Conformity

Up to 19/01/2027: The products described in these instructions are machinery within the meaning of the Machinery Directive 2006/42/EC.

From 20/01/2027: The products described in these instructions are machinery within the meaning of the Machinery Regulation (EU) 2023/1230.

The machinery fulfils all the relevant provisions of the following legal bases:

Number	Name	Remark
Up to 19/01/2027: 2006/42/EC	Machinery Directive	–
From 20/01/2027: Regulation (EU) 2023/1230	Machinery Regulation	–
2014/68/EU	Pressure Equipment Directive	–
2014/30/EU	Directive on Electromagnetic Compatibility	Only for machinery with electrical components
2014/35/EU	Low Voltage Directive	Only for machinery with electrical components
2014/34/EU	Directive on Use in Potentially Explosive Areas (ATEX)	Only for machinery in ATEX version

Tab. 25: Legal bases complied with

KRAL GmbH, 6890 Lustenau, Austria, Tel.: +43/5577/86644-0, E-Mail: kral@kral.at | www.kral.at